TIDALFLUX 2300 F Handbook

Electromagnetic flow sensor for partially filled pipes

The documentation is only complete when used in combination with the relevant documentation for the signal converter.

© KROHNE 11/2018 - 4002490204 MA TIDALFLUX 2300 F R04 en

KROHNE

IMPRINT

All rights reserved. It is prohibited to reproduce this documentation, or any part thereof, without the prior written authorisation of KROHNE Messtechnik GmbH.

Subject to change without notice.

Copyright 2018 by
KROHNE Messtechnik GmbH - Ludwig-Krohne-Str. 5 - 47058 Duisburg (Germany)

1 Safety instructions 5

1.1 Intended use 5
1.2 Certification 5
1.3 Safety instructions from the manufacturer 6
1.3.1 Copyright and data protection 6
1.3.2 Disclaimer 6
1.3.3 Product liability and warranty 7
1.3.4 Information concerning the documentation 7
1.3.5 Warnings and symbols used 8
1.4 Safety instructions for the operator 8

2 Device description 9

2.1 Scope of delivery 9
2.2 Device description 9
2.3 Nameplates 10

3 Installation 12

3.1 General notes on installation 12
3.2 Storage 12
3.3 Transport 12
3.4 Pre-installation requirements 12
3.5 General requirements 13
3.5.1 Vibration 13
3.5.2 Magnetic field 13
3.6 Installation conditions 14
3.6.1 Inlet and outlet 14
3.6.2 Control valve 14
3.6.3 Slope 14
3.6.4 Mounting advice for difficult situations 15
3.6.5 Open discharge 15
3.6.6 Cleaning of flow sensor 16
3.6.7 Flange deviation 16
3.6.8 Mounting position 17
3.6.9 Torques and pressures 17

4 Electrical connections 19

4.1 Safety instructions ... 19
4.2 Important notes on electrical connection ... 19
4.3 Connection of cables ... 20
4.3.1 Cable lengths ... 22
4.3.2 Signal cable connections ... 23
4.3.3 Connection of TIDALFLUX 2000 F ... 24
4.3.4 Connection box TIDALFLUX 2000 ... 26
4.3.5 Connection of IFC 300 F / PF ... 27
4.3.6 Connection box IFC 300 F/PF ... 29
4.4 Signal cable B (type BTS 300), construction ... 30
4.5 Signal cable A (type DS 300), construction ... 30
4.6 Prepare signal cable A, connect to flow sensor ... 31
4.7 Preparing signal cable B, connection to flow sensor ... 32
4.8 Preparing field current cable C, connection to flow sensor ... 33
4.9 Interface cable ... 34
4.10 Grounding ... 36
4.10.1 Mounting grounding rings ... 36
4.11 Before switching on the power ... 36

5 Service 37

5.1 Spare parts availability ... 37
5.2 Availability of services ... 37
5.3 Returning the device to the manufacturer ... 37
5.3.1 General information ... 37
5.3.2 Form (for copying) to accompany a returned device ... 38
5.4 Disposal ... 38

6 Technical data 39

6.1 Measuring principle ... 39
6.2 Technical data ... 40
6.3 Sizing ... 44
6.4 Measuring accuracy ... 46
6.5 Dimensions and weights ... 47

7 Notes 49

1.1 Intended use

CAUTION!
Responsibility for the use of the measuring devices with regard to suitability, intended use and corrosion resistance of the used materials against the measured fluid lies solely with the operator.

INFORMATION!
The manufacturer is not liable for any damage resulting from improper use or use for other than the intended purpose.

The TIDALFLUX 2300 is especially designed for measuring the flow of conductive fluids in partially filled pipes. It can only be combined with the IFC 300 PF electromagnetic flow converter.

WARNING!
If the device is not used according to the operating conditions (refer to chapter Technical data), the intended protection could be affected.

1.2 Certification

CE marking

The manufacturer certifies successful testing of the product by applying the CE marking.

This device fulfils the statutory requirements of the relevant EU directives.

For full information of the EU directives and standards and the approved certifications, please refer to the EU Declaration of Conformity or the website of the manufacturer.

1.3 Safety instructions from the manufacturer

1.3.1 Copyright and data protection

The contents of this document have been created with great care. Nevertheless, we provide no guarantee that the contents are correct, complete or up-to-date.

The contents and works in this document are subject to copyright. Contributions from third parties are identified as such. Reproduction, processing, dissemination and any type of use beyond what is permitted under copyright requires written authorisation from the respective author and/or the manufacturer.

The manufacturer tries always to observe the copyrights of others, and to draw on works created in-house or works in the public domain.

The collection of personal data (such as names, street addresses or e-mail addresses) in the manufacturer's documents is always on a voluntary basis whenever possible. Whenever feasible, it is always possible to make use of the offerings and services without providing any personal data.

We draw your attention to the fact that data transmission over the Internet (e.g. when communicating by e-mail) may involve gaps in security. It is not possible to protect such data completely against access by third parties.

We hereby expressly prohibit the use of the contact data published as part of our duty to publish an imprint for the purpose of sending us any advertising or informational materials that we have not expressly requested.

1.3.2 Disclaimer

The manufacturer will not be liable for any damage of any kind by using its product, including, but not limited to direct, indirect or incidental and consequential damages.

This disclaimer does not apply in case the manufacturer has acted on purpose or with gross negligence. In the event any applicable law does not allow such limitations on implied warranties or the exclusion of limitation of certain damages, you may, if such law applies to you, not be subject to some or all of the above disclaimer, exclusions or limitations.

Any product purchased from the manufacturer is warranted in accordance with the relevant product documentation and our Terms and Conditions of Sale.

The manufacturer reserves the right to alter the content of its documents, including this disclaimer in any way, at any time, for any reason, without prior notification, and will not be liable in any way for possible consequences of such changes.

1.3.3 Product liability and warranty

The operator shall bear responsibility for the suitability of the device for the specific purpose. The manufacturer accepts no liability for the consequences of misuse by the operator. Improper installation or operation of the devices (systems) will cause the warranty to be void. The respective "Standard Terms and Conditions" which form the basis for the sales contract shall also apply.

1.3.4 Information concerning the documentation

To prevent any injury to the user or damage to the device it is essential that you read the information in this document and observe applicable national standards, safety requirements and accident prevention regulations.

If this document is not in your native language and if you have any problems understanding the text, we advise you to contact your local office for assistance. The manufacturer can not accept responsibility for any damage or injury caused by misunderstanding of the information in this document.

This document is provided to help you establish operating conditions, which will permit safe and efficient use of this device. Special considerations and precautions are also described in the document, which appear in the form of icons as shown below.

1.3.5 Warnings and symbols used

Safety warnings are indicated by the following symbols.

DANGER!
This warning refers to the immediate danger when working with electricity.

DANGER!
This warning refers to the immediate danger of burns caused by heat or hot surfaces.

DANGER!
This warning refers to the immediate danger when using this device in a hazardous atmosphere.

DANGER!
These warnings must be observed without fail. Even partial disregard of this warning can lead to serious health problems and even death. There is also the risk of seriously damaging the device or parts of the operator's plant.

WARNING!
Disregarding this safety warning, even if only in part, poses the risk of serious health problems. There is also the risk of damaging the device or parts of the operator's plant.

CAUTION!
Disregarding these instructions can result in damage to the device or to parts of the operator's plant.

INFORMATION!
These instructions contain important information for the handling of the device.

LEGAL NOTICE!
This note contains information on statutory directives and standards.

- HANDLING
  This symbol designates all instructions for actions to be carried out by the operator in the specified sequence.

➲ RESULT
This symbol refers to all important consequences of the previous actions.

1.4 Safety instructions for the operator

WARNING!
In general, devices from the manufacturer may only be installed, commissioned, operated and maintained by properly trained and authorized personnel.
This document is provided to help you establish operating conditions, which will permit safe and efficient use of this device.

2.1 Scope of delivery

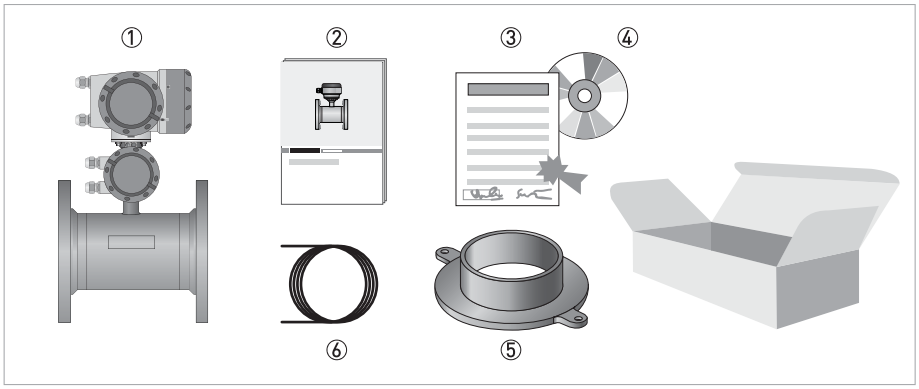

Figure 2-1: Scope of delivery

① Ordered flowmeter
② Product documentation
③ Factory calibration report
④ CD-ROM with product documentation
⑤ Grounding rings (optionally)
⑥ Cable

2.2 Device description

This flowmeter can measure the flow of conductive liquids, even in partially filled pipes. To be able to do this, a capacitive height measurement has been integrated into a regular electromagnetic flowmeter. If both the filled fraction and the velocity of the fluid are known, it is easy to calculate the amount of fluid running through the pipe.

INFORMATION!
Product specific information and extensive product specification is available using PICK, the Product Information Center KROHNE web-tool.

PiCK up your information

PICK can be found via the service menu button on the KROHNE.com website.

2.3 Nameplates

INFORMATION!
Look at the device nameplate to ensure that the device is delivered according to your order. Check for the correct supply voltage printed on the nameplate.

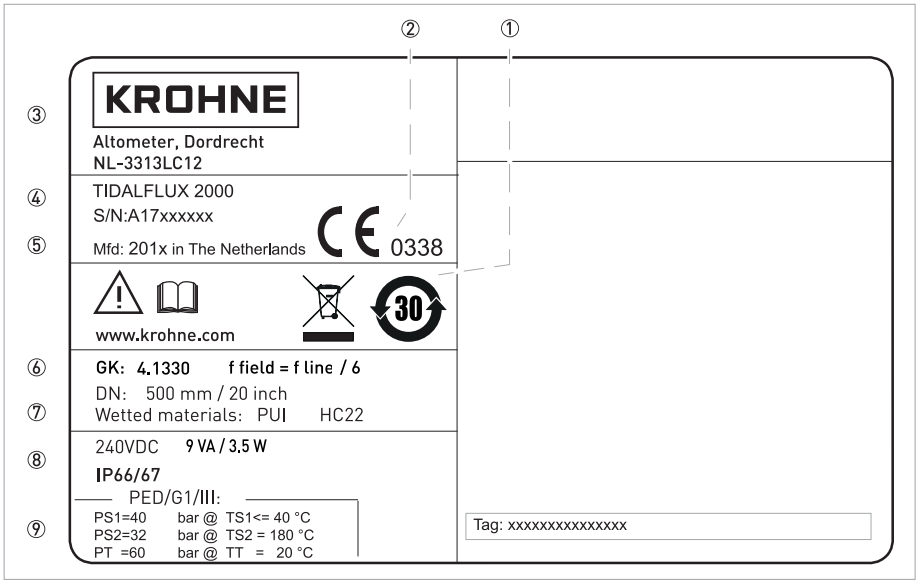

Figure 2-2: Example of nameplate sensor

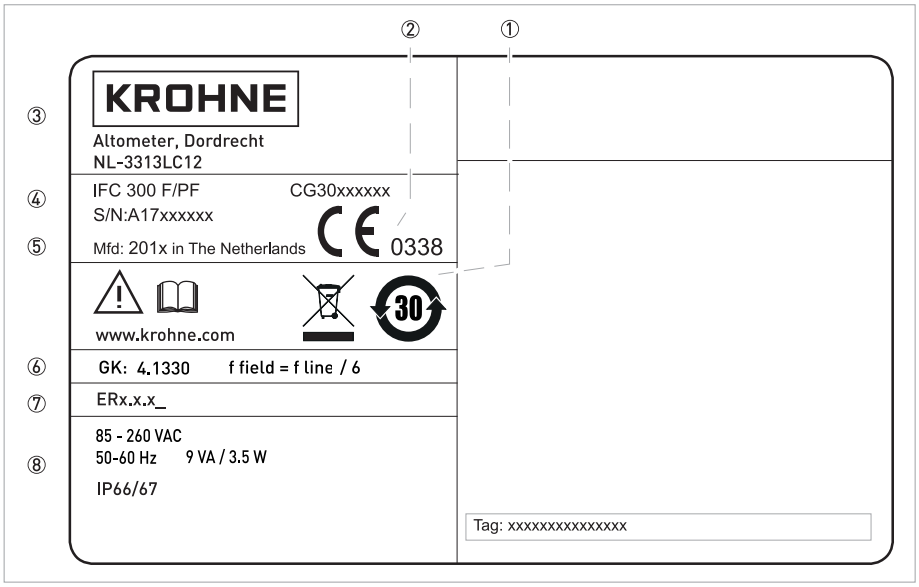

Figure 2-3: Example of nameplate converter

① Additional info, website and recycling logo
② CE marking with number(s) of notified body (bodies)
③ Name and address of manufacturer
④ Type designation with serial / CG number
⑤ Manufacturing date and country of origin
⑥ GK/GKL values (measuring sensor constants), size (mm/inches), field frequency
⑦ Materials of wetted parts or the Electronic Revision number
⑧ Electric values and protection category
⑨ PED data type I/II/III or SEP

Electrical connection data of inputs/outputs (example of basic version)

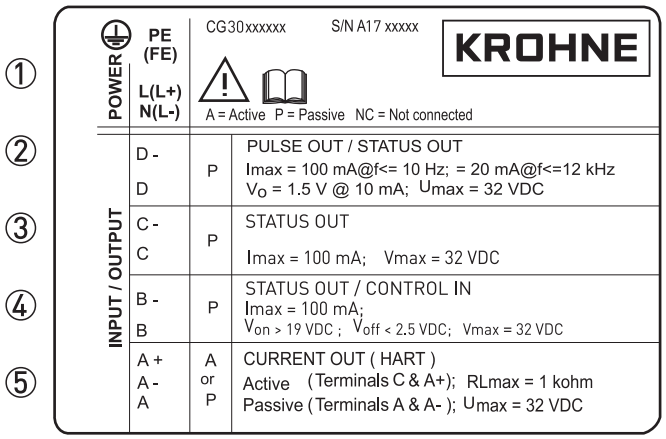

Figure 2-4: Example of IO sticker

① Power supply (AC: L and N, DC: L+ and L-, PE for ≥ 24V AC, FE for ≤ 24 VAC and DC)
② Connection data of connection terminal D/D-
③ Connection data of connection terminal C/C-
④ Connection data of connection terminal B/B-
⑤ Connection data of connection terminal A/A-, A+ only operable in basic version

- A = active mode; the signal converter supplies the power for connection of the subsequent devices
- P = passive mode; external power supply required for operation of the subsequent devices
- N/C = connection terminals not connected

3.1 General notes on installation

INFORMATION!
Inspect the packaging carefully for damages or signs of rough handling. Report damage to the carrier and to the local office of the manufacturer.

INFORMATION!
Do a check of the packing list to make sure that you have all the elements given in the order.

INFORMATION!
Look at the device nameplate to ensure that the device is delivered according to your order. Check for the correct supply voltage printed on the nameplate.

3.2 Storage

- Store the device in a dry and dust-free location.
- Avoid lasting direct exposure to the sun.
- Store the device in its original packaging.
- Storage temperature: -50...+70°C / -58...+158°F

3.3 Transport

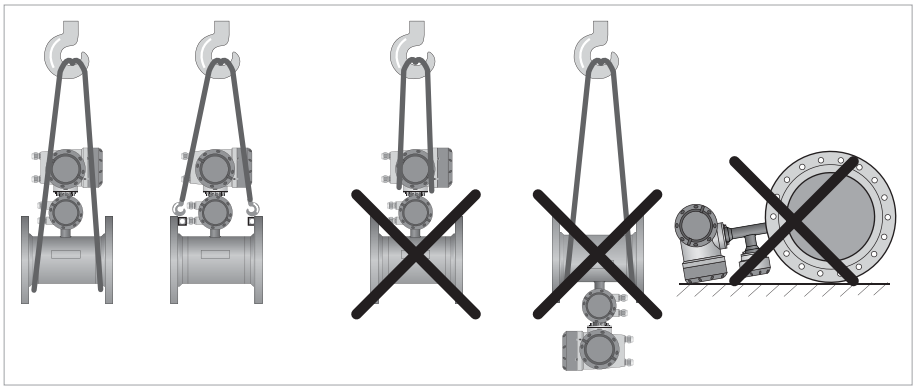

Figure 3-1: Transport

3.4 Pre-installation requirements

Make sure that you have all necessary tools available:

- Allen key (4 mm)
- Small screwdriver
- Wrench for cable glands
- Wrench for wall mounting bracket (remote version only)
- Torque wrench for installing flowmeter in pipeline

3.5 General requirements

INFORMATION!
The following precautions must be taken to ensure reliable installation.

- *Make sure that there is adequate space to the sides.*
- *Protect the signal converter from direct sunlight and install a sun shade if necessary.*
- *Signal converters installed in control cabinets require adequate cooling, e.g. by fan or heat exchanger.*
- *Do not expose the signal converter to intense vibration. The flowmeters are tested for a vibration level in accordance with IEC 68-2-64.*

3.5.1 Vibration

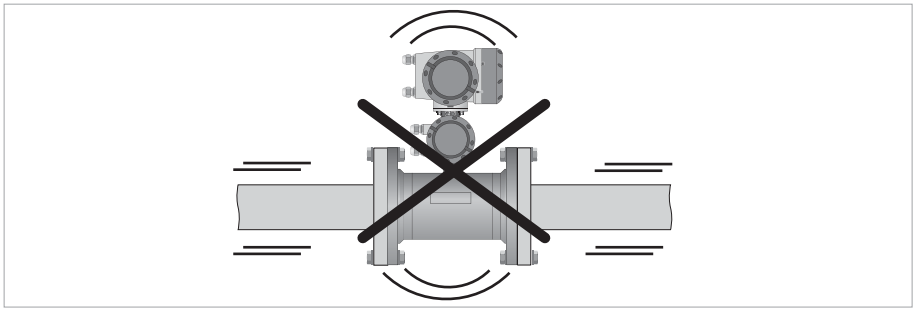

Figure 3-2: Avoid vibrations

3.5.2 Magnetic field

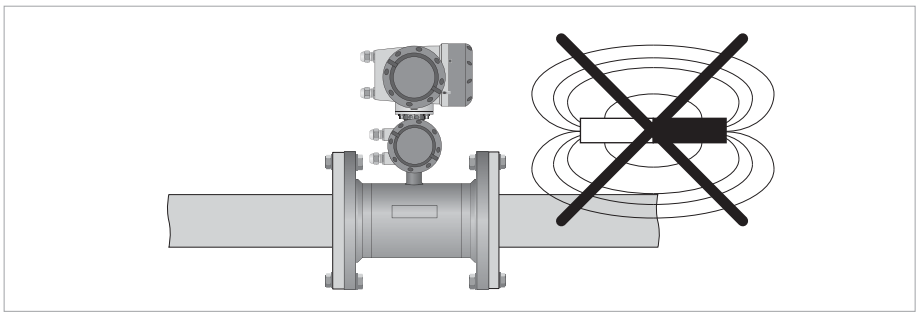

Figure 3-3: Avoid magnetic fields

3.6 Installation conditions

3.6.1 Inlet and outlet

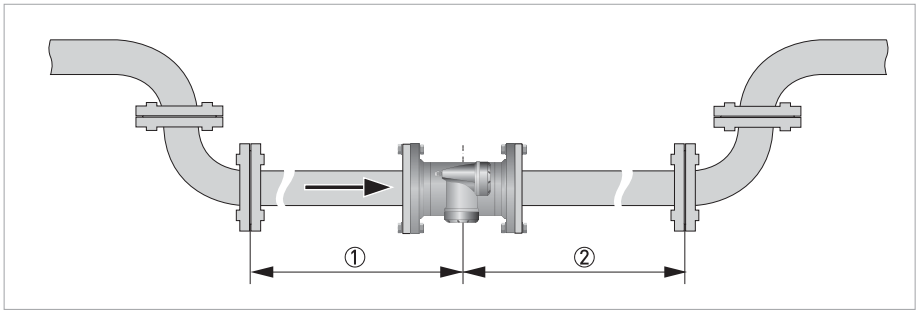

Figure 3-4: Recommended inlet and outlet sections, top view

① ≥ 5 DN
② ≥ 3 DN

3.6.2 Control valve

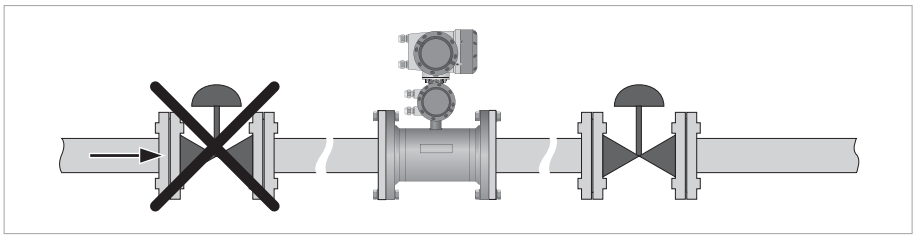

Figure 3-5: Installation before control valve

3.6.3 Slope

CAUTION!
The accuracy is influenced by the slope. Stay within ±1% to get the most accurate measurements!

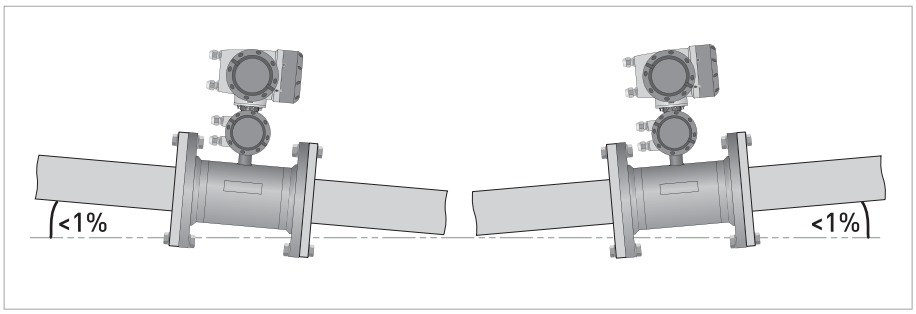

Figure 3-6: Recommended slope

3.6.4 Mounting advice for difficult situations

If you can not meet the installation conditions install the flowmeter between two containers. The inlet to the flowmeter must be higher than the outlet of the fluid. In this way you will have a calm flow into the flowmeter, resulting in a highly accurate measurement. The sizes of the containers must be proportional to the size of the flowmeter.

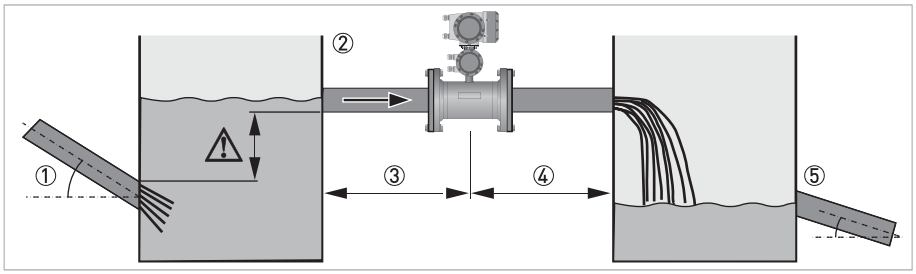

Figure 3-7: Installing in difficult situations

① Use a container ② if the Inlet pipe has a slope > 1%. Make sure that the outlet level of this pipe is below the inlet to the flowmeter.
② Inlet container
③ Inlet section of 10 DN
④ Outlet section of 5 DN
⑤ Outlet container advisable if outlet pipe has a slope > 1%.

CAUTION!
Always use a free exit pipe to prevent backflow in the flow sensor and to keep the velocity at the maximum flow at least at 1 m/s.

3.6.5 Open discharge

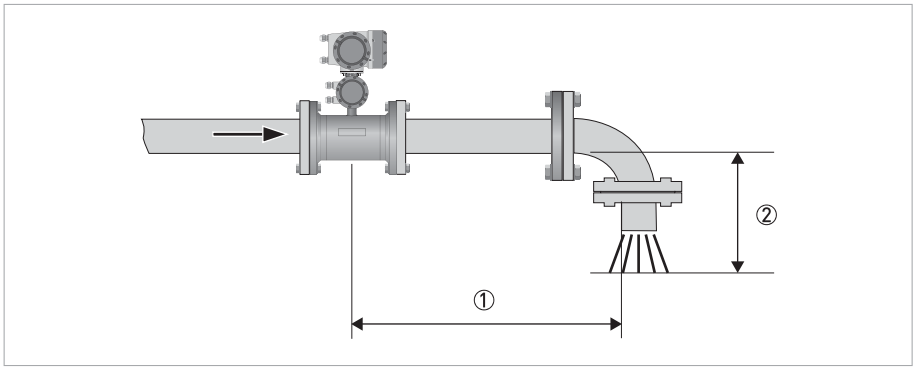

Figure 3-8: Open discharge

① ≥ 5 DN
② Make sure that the water level stays below the pipe outlet.

3.6.6 Cleaning of flow sensor

The flow sensor is highly resistant against dirt and the measurement will rarely be influenced by anything. However, it is advisable to create a possiblity for cleaning just in front or behind the sensor.

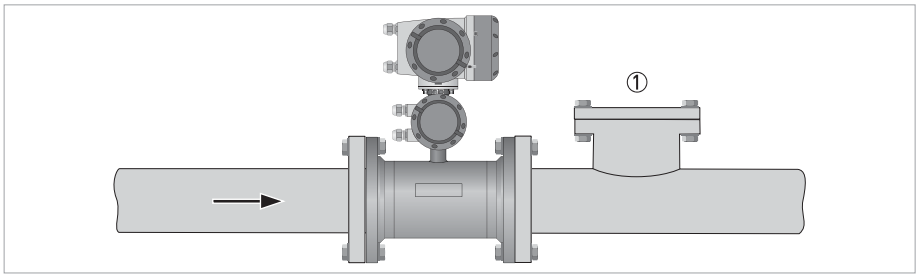

Figure 3-9: Option for cleaning of flow sensor

① Opening for cleaning

3.6.7 Flange deviation

CAUTION!
Max. permissible deviation of pipe flange faces:
L_{max} - L_{min} ≤ 0.5 mm / 0.02"

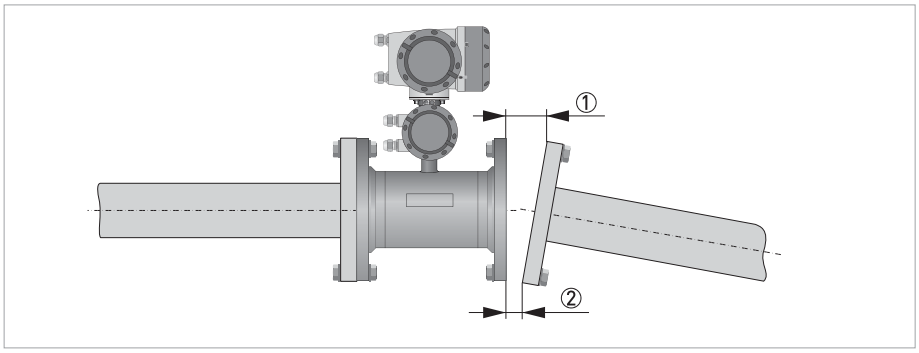

Figure 3-10: Flange deviation

① L_{max}
② L_{min}

3.6.8 Mounting position

CAUTION!
Only install the flow sensor in the shown position to keep the electrodes under water. Limit the rotation to ±2° to maintain the accuracy.

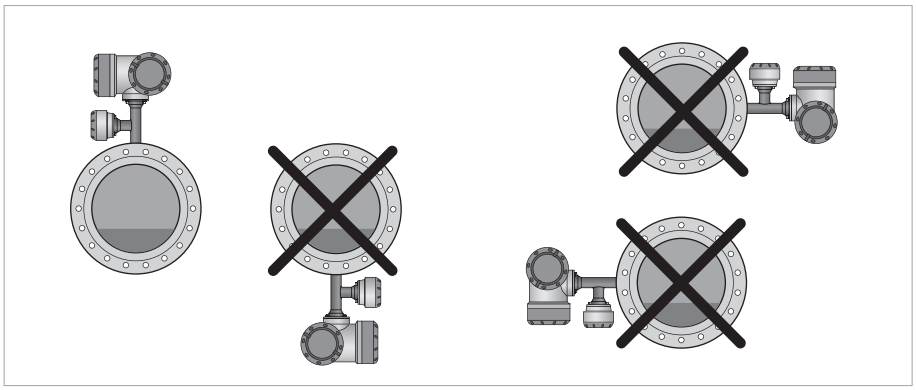

Figure 3-11: Mounting position

3.6.9 Torques and pressures

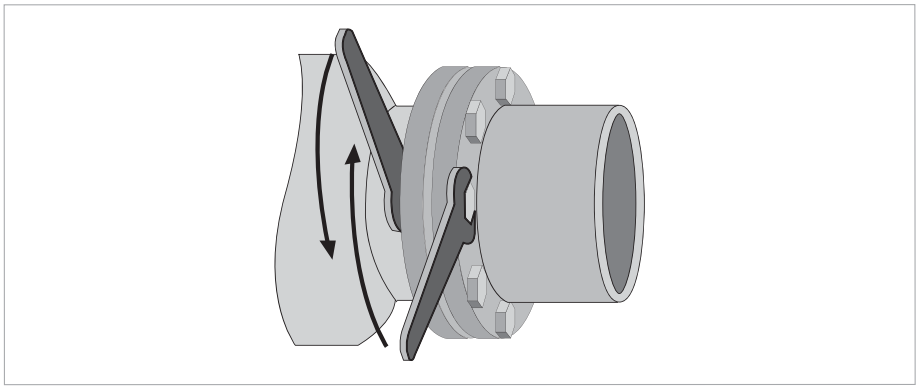

Figure 3-12: Tightening of bolts

Tightening of bolts

- Always tighten the bolts uniformly and in diagonally opposite sequence.
- Do not exceed the maximum torque value.
- Step 1: Apply approx. 50% of max. torque given in table.
- Step 2: Apply approx. 80% of max. torque given in table.
- Step 3: Apply 100% of max. torque given in table.

INFORMATION!
Tighten the bolts uniformely in diagonally opposite sequence.

Nominal size DN [mm]	Pressure rating	Bolts	Max. torque [Nm]
200	PN 10	8 x M 20	68
250	PN 10	12 x M 20	65
300	PN 10	12 x M 20	76
350	PN 10	16 x M 20	75
400	PN 10	16 x M 24	104
500	PN 10	20 x M 24	107
600	PN 10	20 x M 27	138
700	PN 10	24 x M 27	163
800	PN 10	24 x M 30	219
900	PN 10	28 x M 30	205
1000	PN 10	28 x M 33	261
1200	PN 6	32 x M30	252

Nominal size [inch]	Flange class [lb]	Bolts	Max. torque [Nm]
8	150	8 x 3/4"	69
10	150	12 x 7/8"	79
12	150	12 x 7/8"	104
14	150	12 x 1"	93
16	150	16 x 1"	91
18	150	16 x 1 1/8"	143
20	150	20 x 1 1/8"	127
24	150	20 x 1 1/4"	180
28	150	28 x 1 1/4"	161
32	150	28 x 1 1/2"	259
36	150	32 x 1 1/2"	269
40	150	36 x 1 1/2"	269

INFORMATION!
Information for bigger sizes is available on request.

4.1 Safety instructions

DANGER!
All work on the electrical connections may only be carried out with the power disconnected. Take note of the voltage data on the nameplate!

DANGER!
Observe the national regulations for electrical installations!

WARNING!
Observe without fail the local occupational health and safety regulations. Any work done on the electrical components of the measuring device may only be carried out by properly trained specialists.

INFORMATION!
Look at the device nameplate to ensure that the device is delivered according to your order. Check for the correct supply voltage printed on the nameplate.

4.2 Important notes on electrical connection

DANGER!
Electrical connection is carried out in conformity with the VDE 0100 directive "Regulations for electrical power installations with line voltages up to 1000 V" or equivalent national regulations.

CAUTION!
- *Use suitable cable entries for the various electrical cables.*
- *The sensor and converter are configured together in the factory. For this reason, please connect the devices in pairs. Ensure that the sensor constant GK (see nameplates) are identically set.*
- *The TIDALFLUX 2300 sensor and converter need both a separate power supply.*

INFORMATION!
For more information about the grounding of the flowmeter, refer to Grounding on page 36.

4.3 Connection of cables

The illustration shows the different connections and cable entries. View "p" shows (explicit) the bottom entries for signal and field current cables into the connection box on the signal converter.

INFORMATION!
For more detailed information refer to the following electrical diagrams and illustrations in the TIDALFLUX 2300 manual.

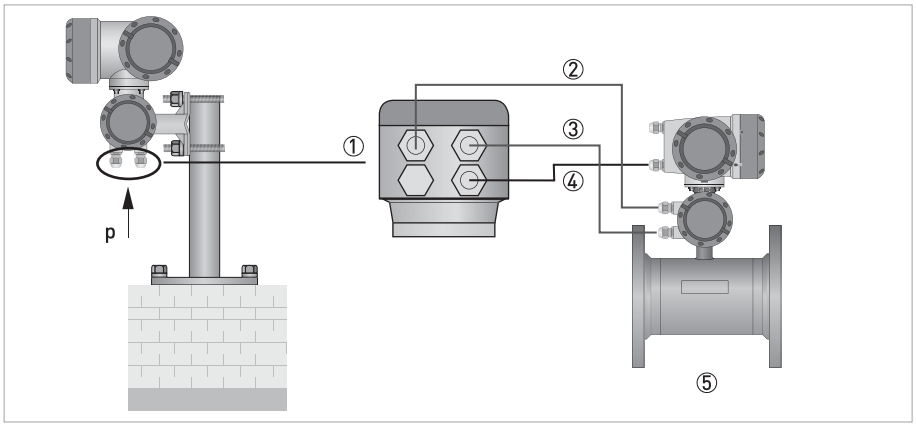

Figure 4-1: Cable entries for electrical connection

① View "p" of the connection box of the signal converter
② Field current cable
③ Signal cable (DS or BTS)
④ Interface cable
⑤ Flow sensor

INFORMATION!
The next drawing shows the situation for a signal cable type BTS. In case of a signal cable type DS, terminals 20 and 30 are not used.

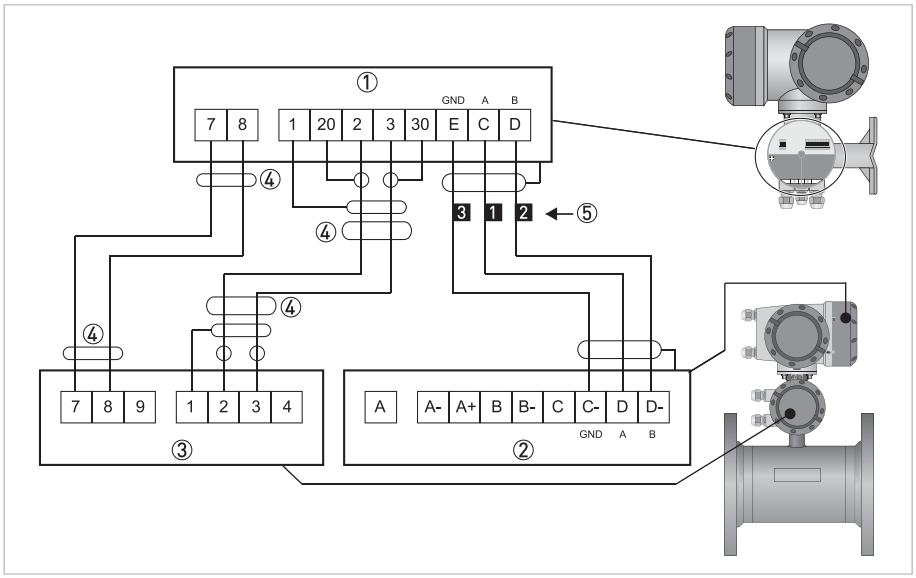

Figure 4-2: Connection diagram

① Connection box of signal converter
② I/O connection box of flow sensor
③ Connection box of flow sensor
④ Connect the outer screens via strain reliefs
⑤ Labelled wires for connection on terminals E-C-D in connection box

4.3.1 Cable lengths

CAUTION!
The maximum allowed distance between the flow sensor and the converter is determined by the shortest cable length.

Interface cable: maximum length is 600 m / 1968 ft.

Type B (BTS) signal cable: maximum length is 600 m / 1968 ft.

Type A (DS) signal cable: maximum length depends on the conductivity of the fluid:

Electrical conductivity	Maximum length	
[µS/cm]	[m]	[ft]
50	120	394
100	200	656
200	400	1312
≥400	600	1968

Field current cable: The cross section of the cable determines the maximum length:

Cross section		Maximum length	
[mm^2]	[AWG]	[m]	[ft]
2 x 0.75	2 x 18	150	492
2 x 1.5	2 x 16	300	984
2 x 2.5	2 x 14	600	1968

4.3.2 Signal cable connections

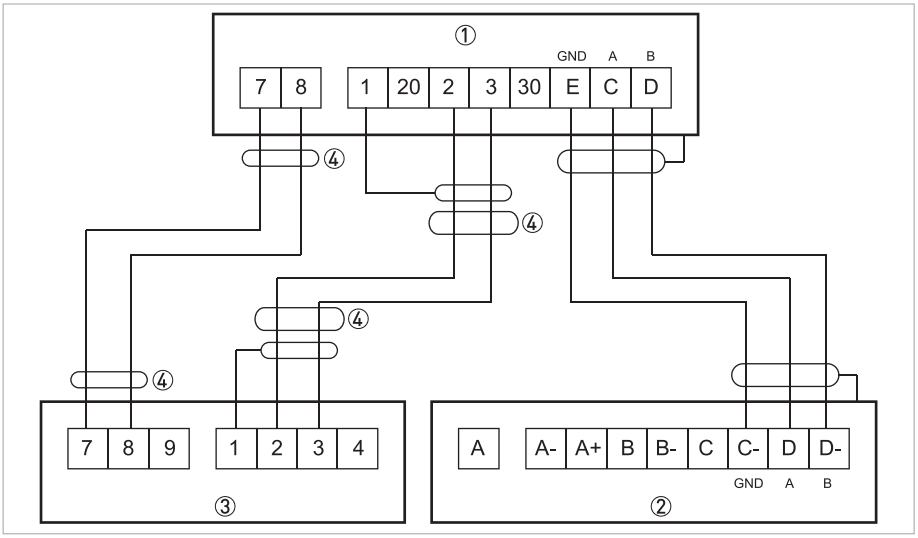

Figure 4-3: Connection diagram for signal cable type A (DS)

① Connection box of converter
② I/O connection box of sensor
③ Connection box of sensor
④ Connect the outer screens via strain reliefs

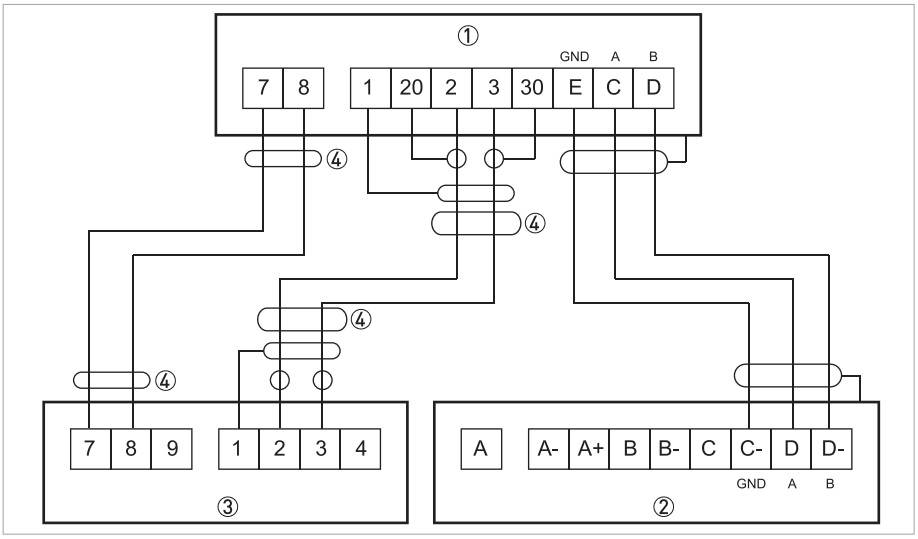

Figure 4-4: Connection diagram for signal cable type B (BTS)

① Connection box of converter
② I/O connection box of sensor
③ Connection box of sensor
④ Connect the outer screens via strain reliefs

4.3.3 Connection of TIDALFLUX 2000 F

The flow sensor and the signal converter must be incorporated in the equipotential bonding system of the installation. This can be established internally by connection of the protective earth (PE) conductor of the mains supply system to the internal PE clamp, or externally, by connecting a separate equipotential bonding conductor between the two external PE-clamps (size M5). A separate bonding conductor must have a cross-sectional area of at least 4 mm^2.

Keep the screw-threads free of dirt and well-greased (e.g. with PTFE grease). The grease will help to prevent the threads from locking due to corrosion.
To unscrew the covers, first release the interlocking devices (one at each cover). Therefore unscrew the M4 head screw with an internal hexagon socket set using a HEX or Allen key no. 2.5 until the interlocking device can be turned. After the covers are screwed back onto the housing, make sure that the interlocking devices are properly refitted.

CAUTION!
The TIDALFLUX 2300 sensor and converter need both a separate power supply.

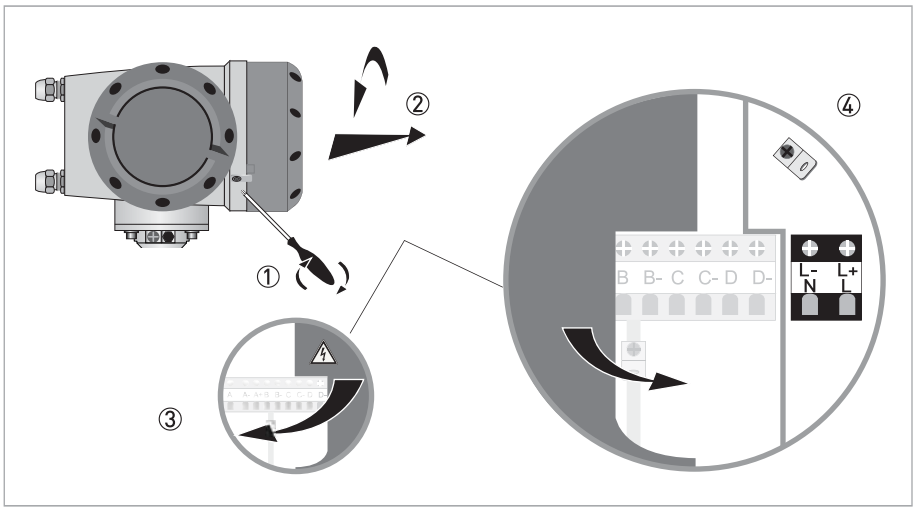

Figure 4-5: Electrical connections

① Unscrew interlocking head screw
② Turn cover counter-clockwise and remove
③ Open / close safety lid of mains supply section
④ Mains supply & signal / data terminals

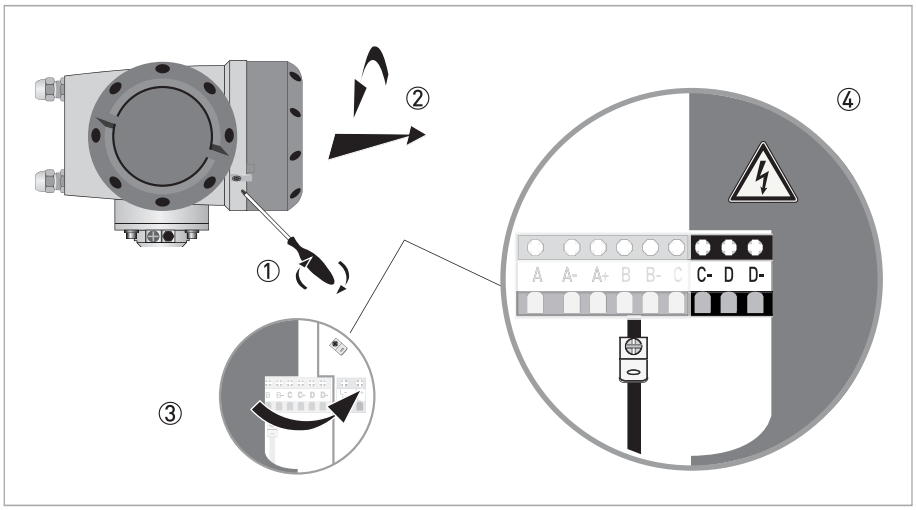

Figure 4-6: Electrical connections

① Unscrew interlocking head screw
② Turn cover counter-clockwise and remove
③ Open / close safety lid of mains supply section
④ Mains supply & signal / data terminals

Description of connections

Terminals	Cable wire colour	Function, electrical data
L, N L+, L-		Connections for mains supply, Type of protection Ex e, 100...230 VAC, +10%/-15%, 9 VA 12...24 VDC, +30%/-10% (short-time: -25%), 3,5 W U_m = 253 V
C- D D-	black 3 black 1 black 2	Connections for RS 485 circuit, Type of protection Ex ia.

4.3.4 Connection box TIDALFLUX 2000

The connection box of the TIDALFLUX 2000 is positioned below the "double housing". Here the signal- and field current cables have to be lead through and the separate wires must be connected on the contacts as described in the illustration below (see also table "Description of connections").

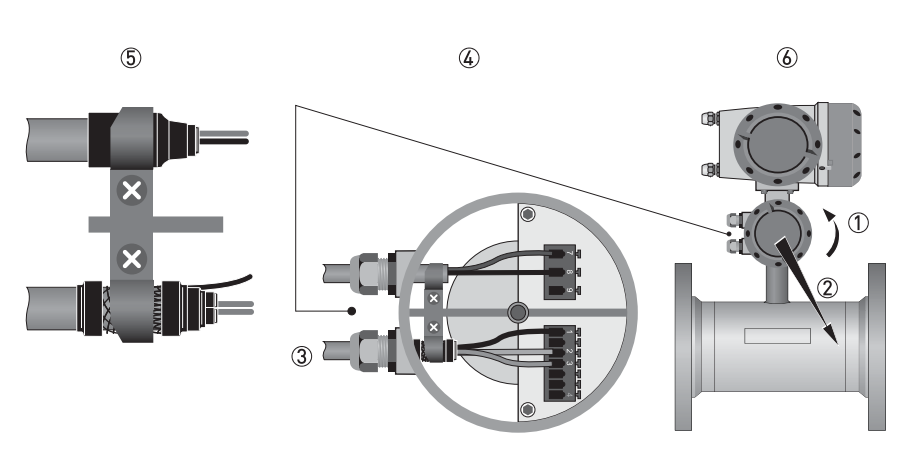

Figure 4-7: Electrical connections

① turn cover counter-clockwise
② remove connection box cover
③ cable entries
④ open connection box on sensor
⑤ connection strain reliefs
⑥ "Double housing" TIDALFLUX 2000

Description of connections

Terminals	Cable wire colour	Function, electrical data
7 8 9	white green	Connections for field current cable connection 9 = Not connected
1 2 3 4	 white red	Connections for signal cable connection 4 = Not connected.

4.3.5 Connection of IFC 300 F / PF

The flow sensor and the signal converter must be incorporated in the equipotential bonding system of the installation. This can be established internally by connection of the protective earth (PE) conductor of the mains supply system to the internal PE clamp, or externally, by connecting a separate equipotential bonding conductor between the two external PE-clamps (size M5). A separate bonding conductor must have a cross-sectional area of at least 4 mm^2.

Keep the screw-threads free of dirt and well-greased (e.g. with PTFE grease). The grease will help to prevent the threads from locking due to corrosion.
To unscrew the covers, first release the interlocking devices (one at each cover). Therefore unscrew the M4 head screw with an internal hexagon socket set using a HEX or Allen key no. 2.5 until the interlocking device can be turned. After the covers are screwed back onto the housing, make sure that the interlocking devices are properly refitted.

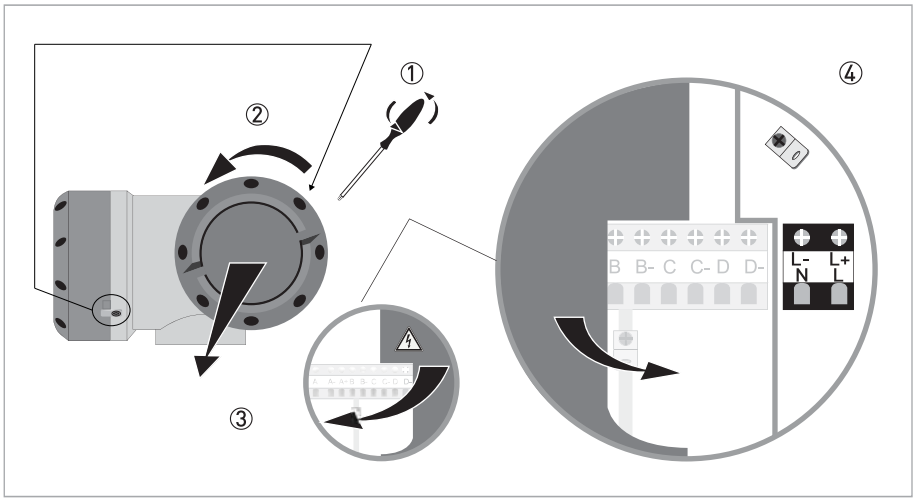

Figure 4-8: Electrical connections

① Unscrew interlocking head screw
② Turn cover counter-clockwise and remove
③ Open/close safety lid of mains supply section
④ Mains supply & signal / data terminals

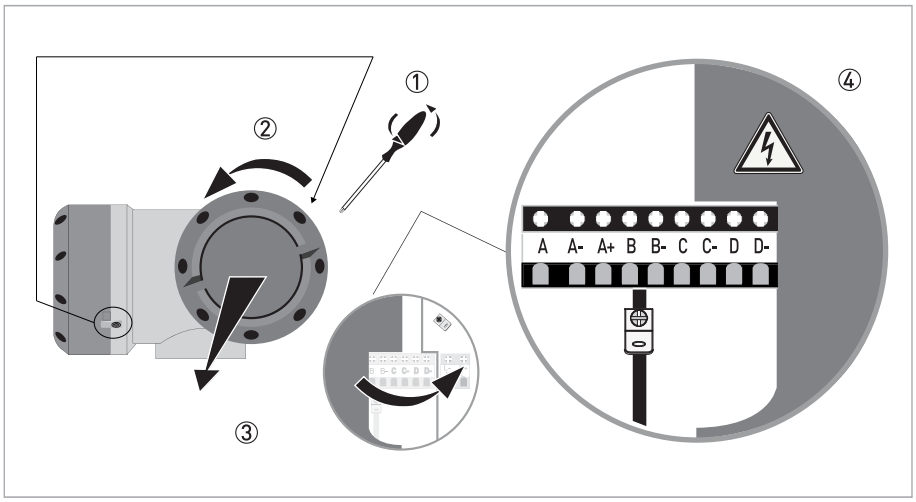

Figure 4-9: Electrical connections

① Unscrew interlocking head screw
② Turn cover counter-clockwise and remove
③ Open/close safety lid of mains supply section
④ Mains supply & signal / data terminals

Description of connections

Terminals	Function, electrical data
L, N L+, L-	Connections for mains supply; Type of protection Ex e, 100...230 VAC, +10%/-15%, 22 VA 12...24 VDC, +30%/-10% (short-time: -25%), 12 W 24 VAC, +10%/-15%, 22 VA 24 VDC, +30%/-25%, 12 W U_m = 253 V
A, A-, A+ B, B- C, C- D, D-	Connections for signal I/Os (PELV circuits); Type of protection Ex e or Ex ia, dependent on the specific version of the signal converter ordered. Consult the tables with CG numbers for details.

4.3.6 Connection box IFC 300 F/PF

The connection box of the IFC 300 signal converter is specially made with an extra cable entry. This cable entry is positioned on the right, just below the regular entries. The field current cable has to be lead through this entry and must be connected on the contacts as described in the figure below (see also table "Description of connections").

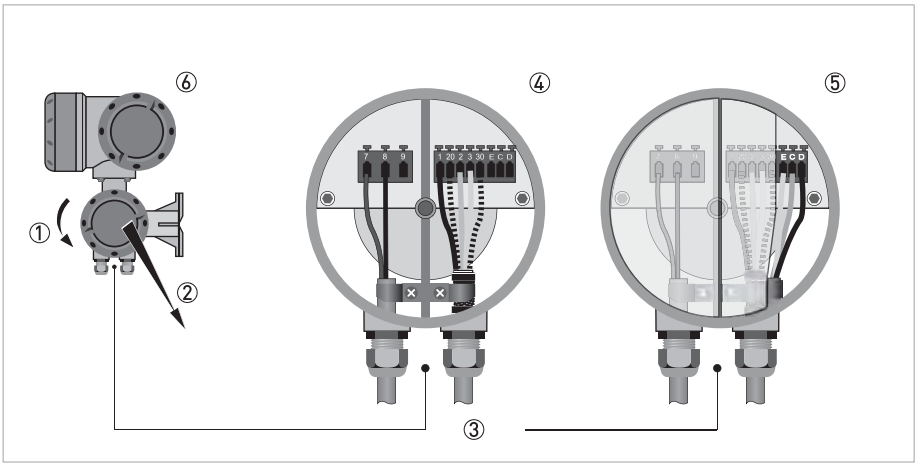

Figure 4-10: Electrical connections

① turn cover counter-clockwise
② remove connection box cover
③ upper left/right & bottom right cable entries
④ connection field current and signal cable (depending on used cable BTS / DS 300)
⑤ bottom right cable connection (RS 485 circuit)
⑥ signal converter

Terminals	Cable wire colour	Function, electrical data
7 8 9	white green	Connections for field current cable connection 9 = Not connected
E C D	black 3 black 1 black 2	Connections for RS 485 circuit Type of protection Ex e or Ex ia,
1 2 - 20 3 - 30	 white red	ground Connections for signal cable (Depending on used cable BTS / BS 300)

4.4 Signal cable B (type BTS 300), construction

- Signal cable B is a triple-shielded cable for signal transmission between the flow sensor and signal converter.
- Bending radius: ≥ 50 mm / 2"

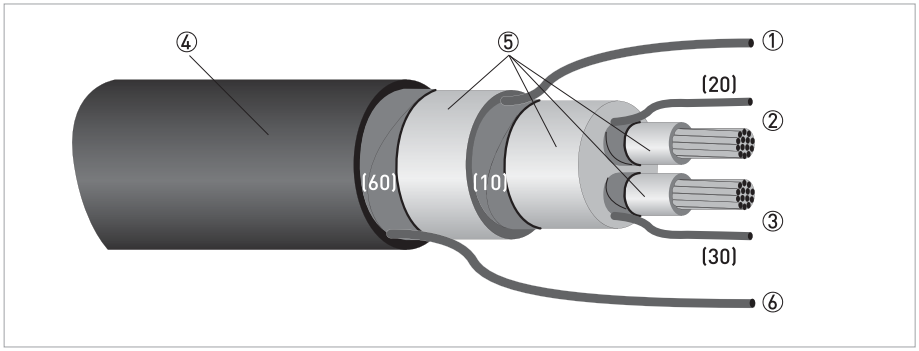

Figure 4-11: Construction of signal cable B

① Stranded drain wire for the inner shield (10), 1.0 mm^2 Cu / AWG 17 (not insulated, bare)
② Insulated wire (2), 0.5 mm^2 Cu / AWG 20 with stranded drain wire (20) of shield
③ Insulated wire (3), 0.5 mm^2 Cu / AWG 20 with stranded drain wire (30) of shield
④ Outer sheath
⑤ Insulation layers
⑥ Stranded drain wire (6) for the outer shield (60), 0.5 mm^2 Cu / AWG 20 (not insulated, bare)

4.5 Signal cable A (type DS 300), construction

- Signal cable A is a double-shielded cable for signal transmission between the flow sensor and signal converter.
- Bending radius: ≥ 50 mm / 2"

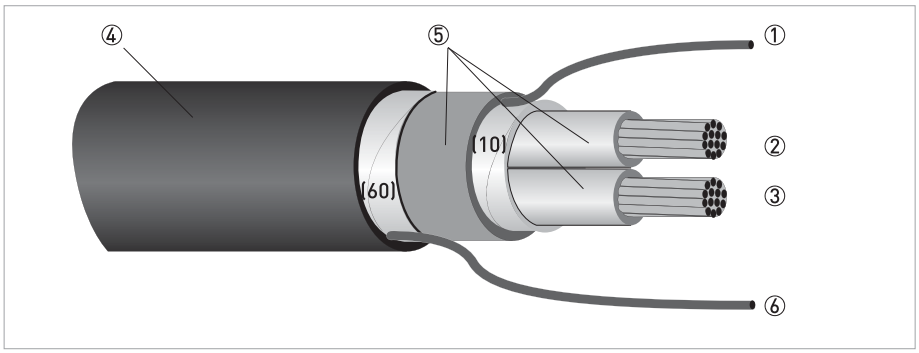

Figure 4-12: Construction of signal cable A

① Stranded drain wire (1) for the inner shield (10), 1.0 mm^2 Cu / AWG 17 (not insulated, bare)
② Insulated wire (2), 0.5 mm^2 Cu / AWG 20
③ Insulated wire (3), 0.5 mm^2 Cu / AWG 20
④ Outer sheath
⑤ Insulation layers
⑥ Stranded drain wire (6) for the outer shield (60)

4.6 Prepare signal cable A, connect to flow sensor

INFORMATION!
Assembly materials and tools are not part of the delivery. Use the assembly materials and tools in compliance with the applicable occupational health and safety directives.

Required materials

- PVC insulating tube, Ø2.0...2.5 mm / 0.08...0.1"
- Heat-shrinkable tubing
- Wire end ferrule to DIN 46 228: E 1.5-8 for the twisted stranded drain wires (1) and (6)
- 2x wire end ferrules to DIN 46 228: E 0.5-8 for the insulated conductors (2, 3)

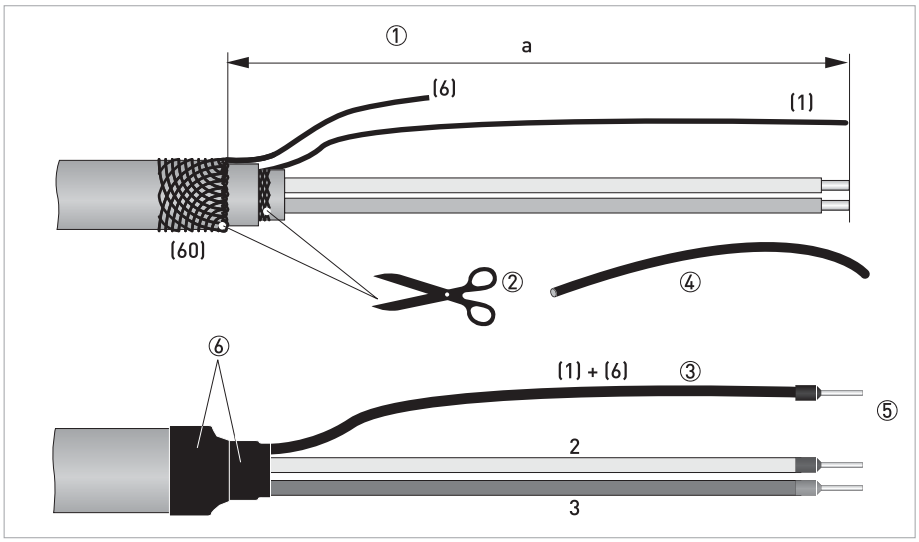

Figure 4-13: Prepare signal cable A, connect to flow sensor

a = 50 mm / 2"

① Strip the conductor to dimension a.
② Cut the outer shields (60) and (10). Make sure not to damage the stranded drain wires (1) and (6).
③ Twist the stranded drain wires (6) of the outer shield and the drain wire (1) of the inner shield (10).
④ Slide an insulating tube over the stranded drain wires (1) and (6).
⑤ Crimp the wire end ferrules onto conductors 2 and 3 and the stranded drain wires (1) and (6).
⑥ Pull the heat-shrinkable tubing over the prepared signal cable.

4.7 Preparing signal cable B, connection to flow sensor

INFORMATION!
Assembly materials and tools are not part of the delivery. Use the assembly materials and tools in compliance with the applicable occupational health and safety directives.

Required materials

- PVC insulating tube, Ø2.0...2.5 mm / 0.08...0.1"
- Heat-shrinkable tubing
- Wire end ferrule to DIN 46 228: E 1.5-8 for the twisted stranded drain wires (1) and (6)
- 2x wire end ferrules to DIN 46 228: E 0.5-8 for the insulated conductors (2, 3)

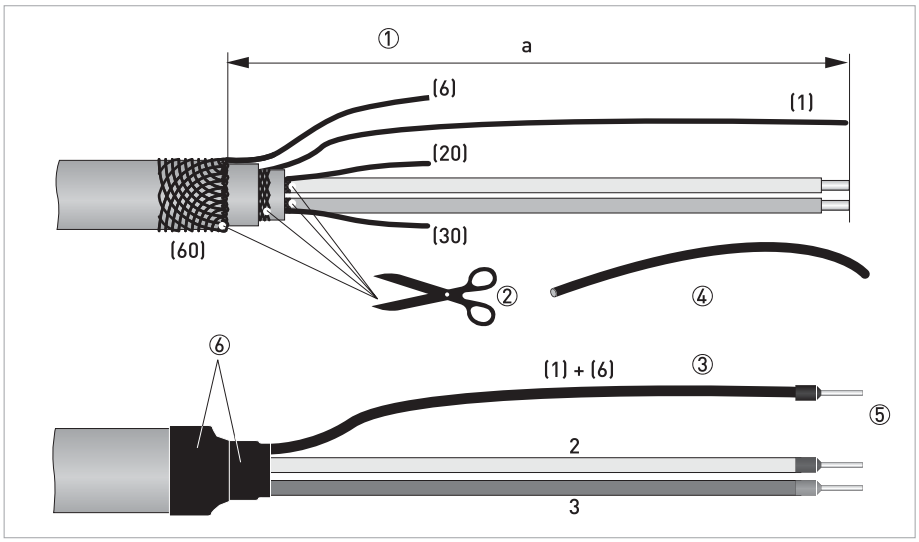

Figure 4-14: Preparing signal cable B, connection to flow sensor

a = 50 mm / 2"

① Strip the conductor to dimension a.
② Cut the outer shields (60), (10), the shields around the insulated conductors (2, 3) and the stranded drain wires (20, 30). Make sure not to damage the stranded drain wires (1) and (6).
③ Twist the stranded drain wires (6) of the outer shield and the drain wire (1) of the inner shield (10).
④ Slide an insulating tube over the stranded drain wires (1) and (6).
⑤ Crimp the wire end ferrules onto conductors 2 and 3 and the stranded drain wires (1) and (6).
⑥ Pull the heat-shrinkable tubing over the prepared signal cable.

4.8 Preparing field current cable C, connection to flow sensor

INFORMATION!
Assembly materials and tools are not part of the delivery. Use the assembly materials and tools in compliance with the applicable occupational health and safety directives.

- The field current cable is not part of the scope of delivery.
- The shield is connected in the terminal compartment of the signal converter directly via the shield and a clip.
- The shield is connected in the flow sensor via the special cable gland.
- Bending radius: ≥ 50 mm / 2"

Required materials

- Shielded 2-wire insulated copper cable
- Insulating tube, size according to the cable being used
- Heat-shrinkable tubing
- DIN 46 228 wire end ferrules: size according to the cable being used

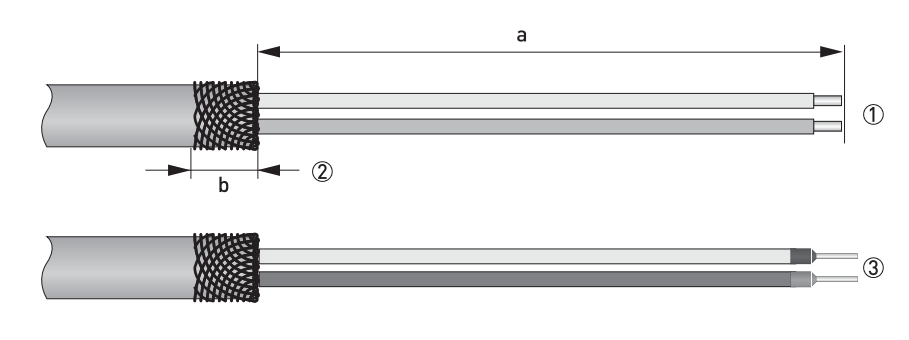

Figure 4-15: Preparation of field current cable C

a = 125 mm / 5"
b = 10 mm / 0.4"

① Strip the conductor to dimension a.
② Trim the outer shield to dimension b and pull it over the outer sheath.
③ Crimp wire end ferrules onto both conductors.

4.9 Interface cable

The data interface cable is a shielded, 3 x 1.5 mm^2 LIYCY cable.

Preparing the interface cable

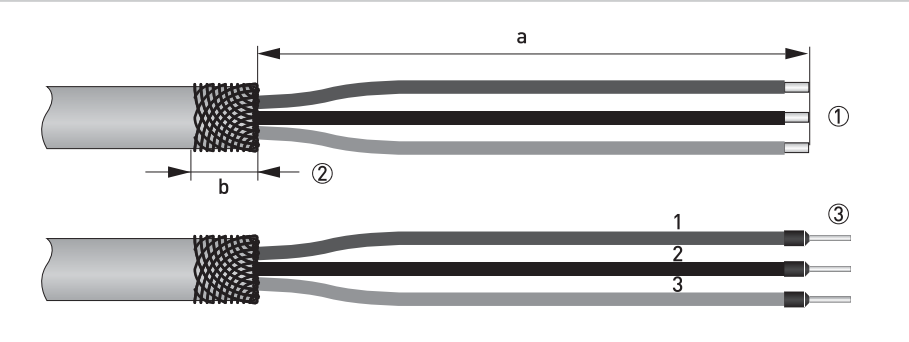

Figure 4-16: Preparing the interface cable

a = 100 mm / 4"
b = 10 mm / 0.4"

① Strip the conductor to dimension a.
② Trim the outer shield to dimension b and pull it over the outer sheath.
③ Crimp the wire end ferrules onto the conductors 1, 2 and 3.

Connect the shielding at both sides of the cable via the special cable gland.

At signal converter side:

Connecting shielding under clamp in connection box of converter

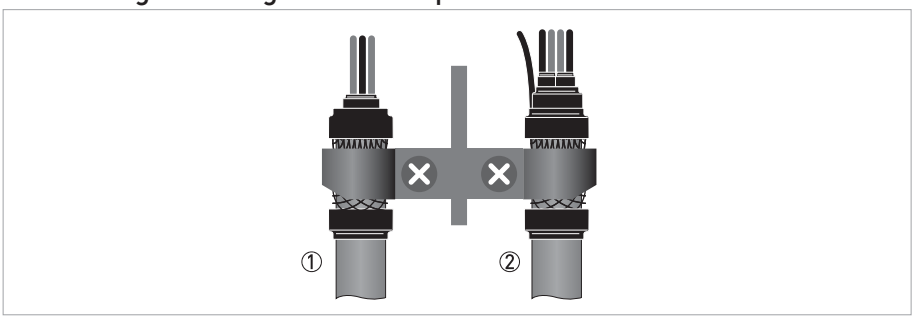

Figure 4-17: Clamping of shields

① Field current cable
② Signal cable

At flow sensor side:

Connecting shielding via special cable gland

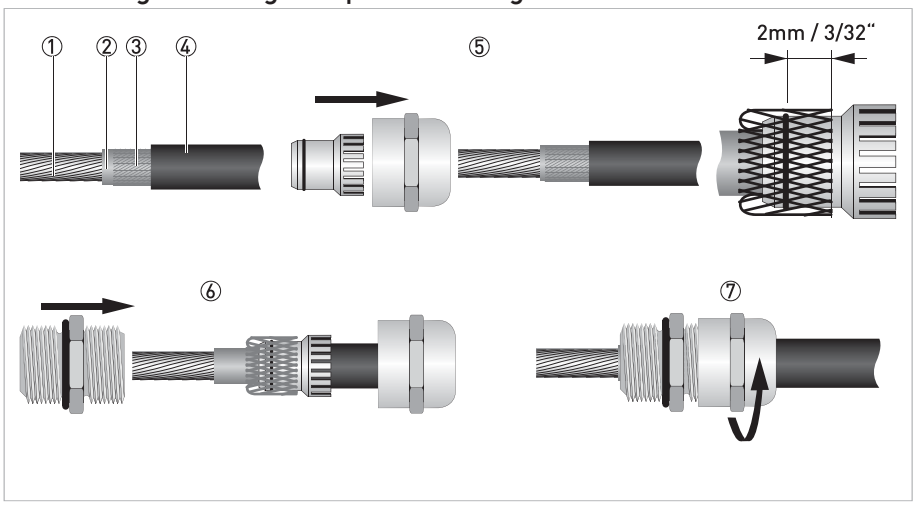

Figure 4-18: Connecting the shield within the cable gland

① Wires
② Isolation
③ Shielding
④ Isolation
⑤ Feed cable through dome nut and clamping insert and fold shielding over clamping insert. Make sure that the braided shield overlaps the O-ring by 2 mm / 3/32".
⑥ Push clamping insert into body.
⑦ Tighten the dome nut.

4.10 Grounding

DANGER!
The device must be grounded in accordance with regulations in order to protect personnel against electric shocks.

4.10.1 Mounting grounding rings

CAUTION!
*In order to get a reliable height measurement it is **absolutely necessary** that the inner side of the connecting pipeline is electrically conductive and connected to ground. If not, tailor-made grounding rings with a cylindrical part can be delivered. Please contact your local agency in case of doubt.*

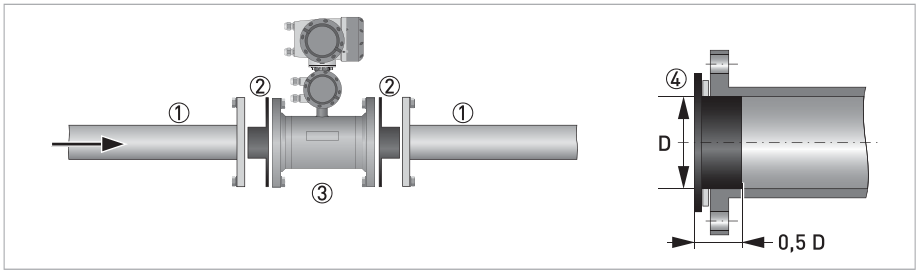

Figure 4-19: Grounding with grounding rings

① Existing pipeline
② Grounding rings, custom made to inner diameter of pipeline
③ TIDALFLUX
④ Insert the cylindrical part of the grounding ring into the pipeline. Use an appropiate gasket between the grounding ring and the flange.

INFORMATION!
Sizes of the grounding rings are diameter dependent and available on request.

4.11 Before switching on the power

Before switching on the power, please check that the system has been correctly installed. This includes:

- The device must be mechanically mounted safely in compliance with the regulations.
- The power connections must be in compliance with the regulations.
- Make sure that all electrical connections are made and that the covers of the terminal compartments are closed.
- Check that the electrical operating data of the power supply are correct.

- Switch on the power.

INFORMATION!
The sensor can not be programmed or changed in any way. All settable functions are included in the converter. Please see the relevant documentation of the converter for more information.

5.1 Spare parts availability

The manufacturer adheres to the basic principle that functionally adequate spare parts for each device or each important accessory part will be kept available for a period of 3 years after delivery of the last production run for the device.

This regulation only applies to spare parts which are subject to wear and tear under normal operating conditions.

5.2 Availability of services

The manufacturer offers a range of services to support the customer after expiration of the warranty. These include repair, maintenance, technical support and training.

INFORMATION!
For more precise information, please contact your local sales office.

5.3 Returning the device to the manufacturer

5.3.1 General information

This device has been carefully manufactured and tested. If installed and operated in accordance with these operating instructions, it will rarely present any problems.

WARNING!
Should you nevertheless need to return a device for inspection or repair, please pay strict attention to the following points:

- *Due to statutory regulations on environmental protection and safeguarding the health and safety of the personnel, the manufacturer may only handle, test and repair returned devices that have been in contact with products without risk to personnel and environment.*
- *This means that the manufacturer can only service this device if it is accompanied by the following certificate (see next section) confirming that the device is safe to handle.*

WARNING!
If the device has been operated with toxic, caustic, radioactive, flammable or water-endangering products, you are kindly requested:

- *to check and ensure, if necessary by rinsing or neutralising, that all cavities are free from such dangerous substances,*
- *to enclose a certificate with the device confirming that it is safe to handle and stating the product used.*

5.3.2 Form (for copying) to accompany a returned device

CAUTION!
To avoid any risk for our service personnel, this form has to be accessible from outside of the packaging with the returned device.

Company:		Address:
Department:		Name:
Tel. no.:		Fax no. and/or Email address:
Manufacturer's order no. or serial no.:		
The device has been operated with the following medium:		
This medium is:		radioactive
		water-hazardous
		toxic
		caustic
		flammable
		We checked that all cavities in the device are free from such substances.
		We have flushed out and neutralized all cavities in the device.
We hereby confirm that there is no risk to persons or the environment through any residual media contained in the device when it is returned.		
Date:		Signature:
Stamp:		

5.4 Disposal

LEGAL NOTICE!
Disposal must be carried out in accordance with legislation applicable in your country.

Separate collection of WEEE (Waste Electrical and Electronic Equipment) in the European Union:

According to the directive 2012/19/EU, the monitoring and control instruments marked with the WEEE symbol and reaching their end-of-life **must not be disposed of with other waste**.
The user must dispose of the WEEE to a designated collection point for the recycling of WEEE or send them back to our local organisation or authorised representative.

6.1 Measuring principle

The TIDALFLUX 2000 is an electromagnetic flow sensor with an integrated capacitive level measurement system, designed for electrically conductive process liquids. The flow rate Q(t) through the tube is: **Q(t) = v(t) x A(t)**,
in which
v(t) = flow velocity of liquid product
A(t) = wetted area of tube section.

The flow velocity is determined on basis of the known electromagnetic measurement principle. The two measuring electrodes are located in the lower part of the measuring tube, on a level of approx. 10% of the inner diameter of the pipe in order to get a reliable measurement up from a level of 10%.

An electrically conductive fluid flows inside an electrically insulated pipe through a magnetic field. This magnetic field is generated by a current, flowing through a pair of field coils. Inside of the fluid, a voltage U is generated:
U = v * k * B * D
in which:
v = mean flow velocity
k = factor correcting for geometry
B = magnetic field strength
D = distance between electrodes

The signal voltage U is picked off by electrodes and is proportional to the mean flow velocity v and thus the flow rate q. The signal voltage is quite small (typically 1 mV at v = 3 m/s / 10 ft/s and field coil power of 1 W). Finally, a signal converter is used to amplify the signal voltage, filter it (separate from noise) and convert it into signals for totalising, recording and output processing.

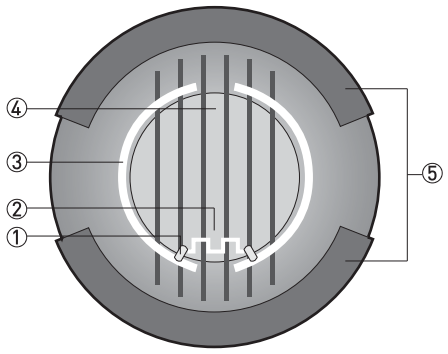

Figure 6-1: Measuring principle TIDALFLUX

① Electrodes
② Induced voltage (proportional to flow velocity)
③ Capacitive plates in liner for height measurement
④ Magnetic field
⑤ Field coils

The wetted area A is computed from the known inside diameter of the pipe by the patented capacitive level measurement system that is built into the measuring tube liner. The required electronics unit is accommodated in a compact housing that is mounted on top of the measuring sensor. This electronics is connected to the remote IFC 300 F converter by means of a digital communication line.

6.2 Technical data

INFORMATION!

- *The following data is provided for general applications. If you require data that is more relevant to your specific application, please contact us or your local sales office.*
- *Additional information (certificates, special tools, software,...) and complete product documentation can be downloaded free of charge from the website (Downloadcenter).*

Measuring system

Measuring principle	Faraday's law
Application range	Electrically conductive fluids
Measured value	
Primary measured value	Flow velocity
	Level
Secondary measured value	Volume flow

Design

Features	Flange version with full bore flow tube
	Standard as well as higher pressure ratings
	Broad range of nominal sizes
Modular construction	The measurement system consists of a flow sensor and a signal converter. It is available as remote version. More information about the signal converter can be found in the documentation of the signal converter.
Remote version	In field (F) version with IFC 300 signal converter: TIDALFLUX 2300 F.
	Note: Compact versions are not available.
Nominal diameter	DN200...1600 / 8...64"

Measuring accuracy

Maximum measuring error	Related to volume flow (MV = Measured Value, FS = Full Scale)
	For detailed information on the measuring accuracy, refer to *Measuring accuracy* on page 46.
	These values are related to the pulse / frequency output
	The additional typical measuring deviation for the current output is ±10 µA
	Partly filled:
	v @ Full Scale ≥ 1 m/s / 3.3 ft/s: ≤ 1% of FS
	Fully filled:
	v ≥ 1 m/s / 3.3 ft/s: ≤ 1% of MV
	v < 1 m/s / 3.3 ft/s: ≤ 0.5% of MV + 5 mm/s (0.2 inch/s)
	Minimum level: 10% of inner diameter

Operating conditions

Temperature	
Process temperature	0...+60°C / +32...+140°F
Ambient temperature	Non ATEX: -40…+65°C / -40…+149°F
	ATEX zone 1: -20…+65°C / -4…+149°F
	QPS, Class 1 Div 2: -20…+60°C / -4…+140°F
	Protect electronics against self-heating with ambient temperatures above +55°C / +131°F.
Storage temperature	-50…+70°C / -58…+158°F
Measurement range	-12...+12 m/s / -40...+40 ft/s
Vacuum load (DN200...DN1600 / 8...64")	500 mbar abs. at $T_{process}$ = 40°C / 600 mbar abs. at $T_{process}$ = 60°C
	7.3 psia at $T_{process}$ = 104 °F / 8.7 psia at $T_{process}$ = 140 °F
Chemical properties	
Physical condition	Conductive liquids
Electrical conductivity	≥ 50 µS/cm
Permissible solid content (volume)	≤ 20%
	If process liquid is slurry: density < 1.15 kg/dm^3.

Installation conditions

Installation	For detailed information, refer to *Installation* on page 12.
Flow direction	Forward and reverse.
	Arrow on flow sensor indicates positive flow direction.
Inlet run	≥ 5 DN (without disturbing flow, after a single 90° bend)
	≥ 10 DN (after a double bend 2x 90°)
	≥ 10 DN (behind a control valve)
Outlet run	≥ 3 DN
Dimensions and weights	For detailed information, refer to *Dimensions and weights* on page 47.

Materials

Sensor housing	Standard: sheet steel
	Other materials on request
Measuring tube	Austenitic stainless steel
Flange	Standard: carbon steel, polyurethane coated
	Other materials on request.
Liner	Polyurethane
Connection box	IP 67: die-cast aluminium
	IP 68: Stainless steel
Coating	Standard coating: Polysiloxane
	Option: protective coating (off-shore, burial coating)
Measuring electrodes	Hastelloy® C
Grounding rings	Stainless steel
	Tailor made to inner diameter of connecting pipeline.
	Necessary if inner side of connecting pipeline isn't electrically conductive.

Process connections

Flange	
EN 1092-1	DN200...1600 in PN 6...40 (others on request)
ASME	8...64" in 150...300 lb RF (others on request)
JIS	DN200...1600 in JIS 10...20 K (others on request)
Design of gasket surface	RF (others on request)

Electrical connections

General	Electrical connection is carried out in conformity with the VDE 0100 directive "Regulations for electrical power installations with line voltages up to 1000 V" or equivalent national specifications.
Power supply	Standard: 100...230 VAC (-15% / +10%), 50/60 Hz
	Option: 12...24 VDC (-55% / +10%) 12 VDC; -10% is included in the tolerance range
Power consumption	AC: 22 VA
Field current cable	Shielded cable must be used, no part of delivery.
Signal cable	**DS 300 (type A)** Max. length: 600 m / 1968 ft (dependent on electrical conductivity)
	BTS 300 (type B) Max. length: 600 m / 1968 ft
Data interface cable	For transmission of measured level to IFC 300 F.
	Shielded LIYCY cable, 3 x 0.75 mm^2
Cable entries	Standard: 2x M20 x 1.5 + 2x M16 x 1.5 EMC type
	Option: ½" NPT

Approvals and certificates

CE	
This device fulfils the statutory requirements of the EU directives. The manufacturer certifies successful testing of the product by applying the CE mark.	
	For full information of the EU directives and standards and the approved certifications, please refer to the EU Declaration of Conformity or the website of the manufacturer.
Hazardous areas	
ATEX / IECEx	Option: Ex zone 1, IECEx
	DEKRA 12ATEX0235 X
	IECEx DEKRA 12.0079X
QPS	Class 1, Division 2
	LR1338
Other approvals and standards	
Protection category acc. to IEC/EN 60529	Standard: IP 66/67 (NEMA 4/4X/6)
	Option: IP 68 (NEMA 6P)
Vibration resistance	IEC 60068-2-6
Random vibration test	IEC 60068-2-34
Shock test	IEC 60068-2-27

6.3 Sizing

INFORMATION!
These tables state the flow rate in a partially filled pipe, dependant on the slope, filling level, inner diameter and friction factors of the pipe. The values are calculated according to the Manning-Strickler equation. The results do not consider deposits, profile distortion, backwater, the friction of air and the slightly smaller inner diameter of the TIDALFLUX.

Flow and velocity at 100% level, gravity fed, metric values

DN	Steel / PVC		Smooth concrete		Concrete	
Nominal size	v [m/s]	Q [m3/h]	v [m/s]	Q [m3/h]	v [m/s]	Q [m3/h]
slope 0.5%						
200	0.96	109	0.86	97	0.58	66
250	1.11	196	1.00	177	0.67	118
300	1.26	321	1.13	288	0.75	191
350	1.39	481	1.25	433	0.84	291
400	1.52	688	1.37	620	0.91	412
500	1.77	1251	1.59	1124	1.06	749
600	2.00	2036	1.8	1832	1.2	1221
700	2.21	3062	1.99	2757	1.33	1843
800	2.42	4379	2.18	3945	1.45	2624
900	2.62	6000	2.35	5382	1.57	3596
1000	2.81	7945	2.53	7153	1.68	4750
1200	3.17	12906	2.85	11603	1.9	7736
1400	3.51	19451	3.16	17511	2.11	11693
1600	3.84	27794	3.45	24971	2.3	16647
slope 1.0%						
200	1.36	154	1.22	138	0.81	92
250	1.57	277	1.42	251	0.94	166
300	1.78	453	1.6	407	1.07	272
350	1.97	682	1.77	613	1.18	409
400	2.15	973	1.94	878	1.29	584
500	2.5	1767	2.25	1590	1.5	1060
600	2.82	2870	2.54	2585	1.69	1720
700	3.13	4336	2.82	3907	1.88	2605
800	3.42	6189	3.08	5573	2.05	3709
900	3.7	8474	3.33	7626	2.22	5084
1000	3.97	11225	3.57	10094	2.38	6729
1200	4.48	18240	4.03	16408	2.69	10952
1400	4.97	27542	4.47	24771	2.98	16514
1600	5.43	39302	4.89	35394	3.26	23596

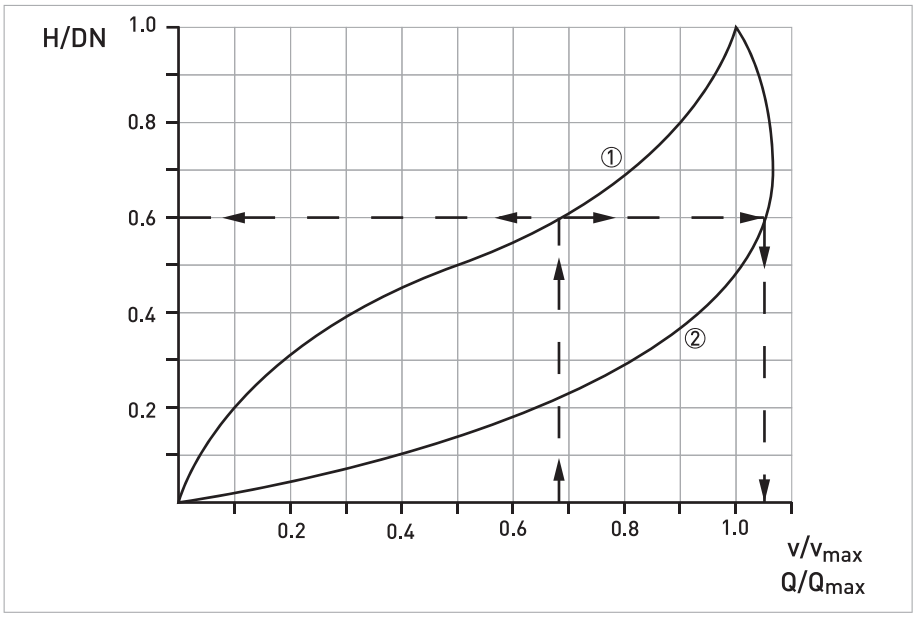

Figure 6-2: Relative flow and velocity versus relative filling level

① Flow Q
② Velocity v

INFORMATION!
v_{max} and Q_{max} are the values of v and Q if the pipe is completely filled

EXAMPLE:

Consider a maximum flow to be measured of 1200 m^3/h. The material of the pipeline is steel and the slope 1.0%.

From the table, a maximum flow has to be selected that is bigger than the flow to be measured.
Selection: DN500, Q_{max} = 1767 m^3/h and v_{max} = 2.5 m/s.
To determine the level in the pipe at 1200 m^3/h, calculated the ratio Q / Q_{max} = 1200 / 1767 = 0.68.
See the above figure and read out the ratio's of H/DN and v/v_{max}:
① H/DN = 0.6 or 0.6 x 500 mm = 300 mm,
② At H/DN = 0.6, find v/v_{max} = 1.05, so v = 1.05 x 2.5 = 2.63 m/s.

INFORMATION!
A sizing tool for various slopes is available at the website of the manufacturer.

6.4 Measuring accuracy

Every electromagnetic flowmeter is calibrated by direct volume comparison. The wet calibration validates the performance of the flowmeter under reference conditions against accuracy limits.

The accuracy limits of electromagnetic flowmeters are typically the result of the combined effect of linearity, zero point stability and calibration uncertainty.

Reference conditions

- Medium: water
- Temperature: +5...35°C / +41...95°F
- Operating pressure: 0.1...5 barg / 1.5...72.5 psig
- Inlet section: ≥ 10 DN
- Outlet section: ≥ 5 DN

The measuring accuracy for partly filled pipes and completely filled pipes are different. In these graphs it is assumed that the velocity at full scale value is at least 1 m/s (is also the standard value for calibration, since it will result in the most accurate measurements). Additional conditions; slope of pipe line 0%, electrical conductivity medium 50...5000 µS/cm.

Partly filled:

- v @ Full Scale ≥ 1 m/s / 3.3 ft/s: ≤ 1% of Full Scale

Fully filled:

- v ≥ 1 m/s / 3.3 ft/s: ≤ 1% of MV
- v < 1 m/s / 3.3 ft/s: ≤ 0.5% of MV + 5 mm/s / 0.2 inch/s (see following graph)

Fully filled pipes

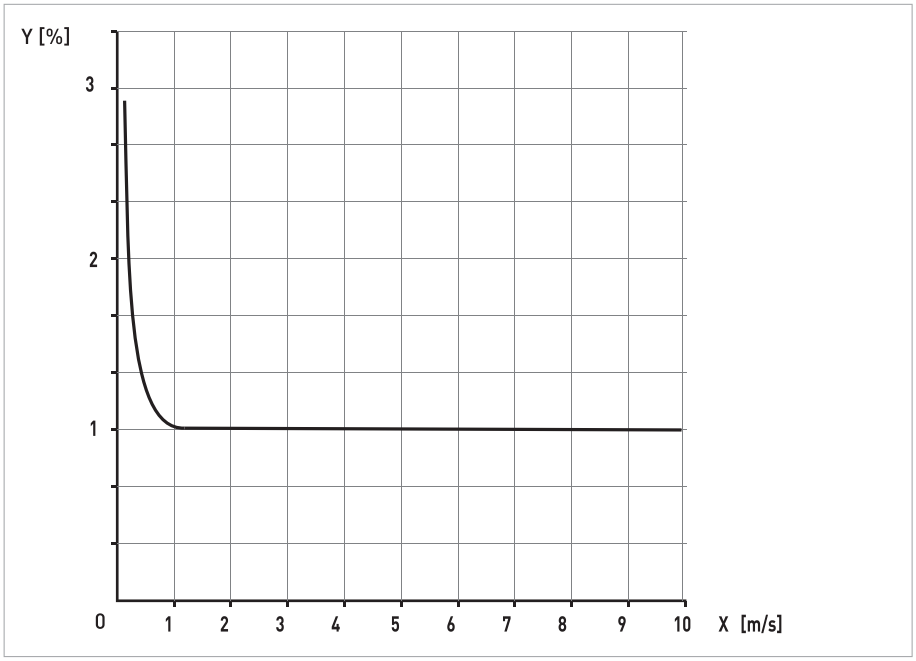

Figure 6-3: Maximum measuring error of measured value (=Y)

6.5 Dimensions and weights

The inner pipe diameter should match the inner diameter of the flowmeter. Since the inner diameter is not a standard DN size, choose the inner pipe diameter to be just a little bit bigger than the flowmeter diameter. If a lot of sediment or fat is expected the optimal solution is to use a customized diameter compensation ring on both sides to have smooth transits.

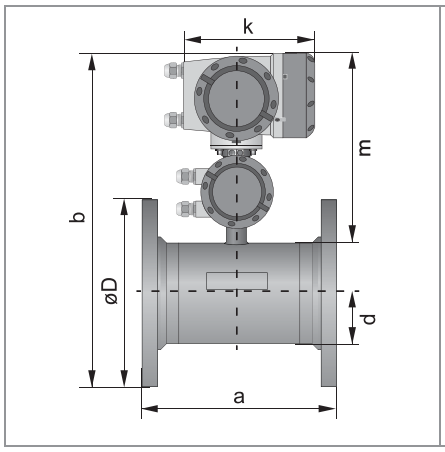

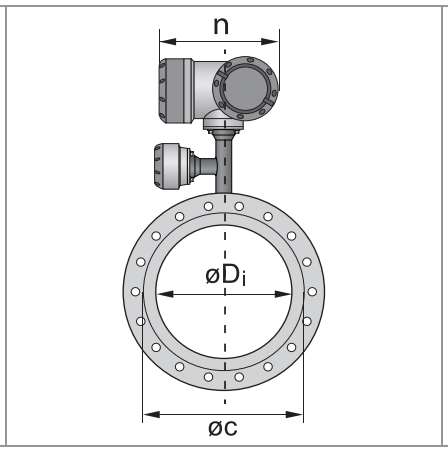

k = 230 mm / 89.1"
m = 265 mm / 10.4"
n = 251 mm / 9.9"

INFORMATION!
Detailed 2D and 3D drawings are available on the website of the manufacturer.

EN 1092-1

Nominal size		Dimensions [mm]						Approx. weight [kg]
DN	PN	a	b	Øc	d	ØD	$ØD_i$	
200	10	350	582	291	146	340	189	40
250	10	400	630	331	166	395	231	54
300	10	500	680	381	191	445	281	66
350	10	500	733	428	214	505	316	95
400	10	600	791	483	242	565	365	115
500	10	600	894	585	293	670	467	145
600	10	600	1003	694	347	780	567	180
700	10	700	1120	812	406	895	666	265
800	10	800	1235	922	461	1015	768	350
900	10	900	1356	1064	532	1115	863	425
1000	10	1000	1447	1132	566	1230	965	520
1200	6	1200	1639	1340	670	1405	1169	659
1400	6	1400	1842	1521	761	1630	1367	835
1600	6	1600	2042	1721	861	1830	1549	1659

150 lb flanges

Nominal size		Dimensions [inches]						Approx. weight [lb]
ASME ①	PN [psi]	a	b	Øc	d	ØD	$ØD_i$	
8	284	13.78	22.93	11.46	5.75	13.5	7.44	90
10	284	15.75	24.80	13.03	6.54	16.0	9.09	120
12	284	19.69	26.76	15	7.52	19.0	11.06	145
14	284	27.56	30.22	16.85	9.8	21.0	12.44	210
16	284	31.5	31.13	19.02	9.53	23.5	14.37	255
20	284	31.5	35.21	23.03	11.54	27.5	18.39	320
24	284	31.5	39.50	27.32	13.66	32.0	22.32	400
28	Class D	35.43	44.71	31.97	15.98	36.5	26.22	692
32	Class D	39.37	49.51	36.3	18.15	41.8	30.24	1031
36	Class D	43.31	54.42	41.89	20.94	46.0	33.98	1267
40	Class D	47.24	58.14	44.57	22.28	50.8	37.99	1554
48	Class D	55.12	66.61	52.76	26.38	59.5	46.02	2242
① Nominal size ≤ 24": ASME; > 24": AWWA								

KROHNE – Process instrumentation and measurement solutions

- Flow
- Level
- Temperature
- Pressure
- Process Analysis
- Services

Head Office KROHNE Messtechnik GmbH
Ludwig-Krohne-Str. 5
47058 Duisburg (Germany)
Tel.: +49 203 301 0
Fax: +49 203 301 10389
info@krohne.com

The current list of all KROHNE contacts and addresses can be found at:
www.krohne.com

© KROHNE 11/2018 - 4002490204 MA TIDALFLUX 2300 F R04 en - Subject to change without notice.