OPTISONIC 7300 Handbook

Ultrasonic process gas flowmeter

ER 1.1.8_

© KROHNE 11/2022 - 4001102306 - MA OPTISONIC 7300 R06 en

KROHNE

IMPRINT

All rights reserved. It is prohibited to reproduce this documentation, or any part thereof, without the prior written authorisation of KROHNE Messtechnik GmbH.

Subject to change without notice.

Copyright 2022 by
KROHNE Messtechnik GmbH - Ludwig-Krohne-Str. 5 - 47058 Duisburg (Germany)

1 Safety instructions 7

1.1 Software history 7
1.2 Intended use 8
1.3 Certification 8
1.4 Safety instructions from the manufacturer 9
1.4.1 Copyright and data protection 9
1.4.2 Disclaimer 9
1.4.3 Product liability and warranty 10
1.4.4 Information concerning the documentation 10
1.4.5 Warnings and symbols used 11
1.5 Safety instructions for the operator 11

2 Device description 12

2.1 Scope of delivery 12
2.2 Device description 13
2.2.1 Field housing 14
2.3 Nameplates 15
2.3.1 Example of nameplate for the compact version 15
2.3.2 Example of nameplate for the flow sensor (remote version) 16
2.3.3 Examples of nameplates on the signal converter 16

3 Installation 18

3.1 General notes on installation 18
3.2 Storage 18
3.3 Transport 18
3.4 Pre-installation requirements 19
3.5 General requirements 19
3.5.1 Vibration 19
3.6 Installation requirements for the flow sensor 20
3.7 Installation conditions 20
3.7.1 Inlet and outlet 20
3.7.2 Bends in 2 or 3 dimensions 21
3.7.3 T-section 21
3.7.4 Control valve 22
3.7.5 Flange deviation 23
3.7.6 Installation position 23
3.7.7 Thermal insulation 24
3.8 Mounting the field housing, remote version 25
3.8.1 Pipe mounting 25
3.8.2 Wall mounting 26
3.8.3 Turning the display (field and compact version only) 27

4 Electrical connections 28

4.1 Safety instructions 28
4.2 Laying electrical cables correctly 28
4.3 Connection of signal cable to signal converter (remote version only) 29
4.4 Power supply connection 31
4.5 Inputs and outputs, overview 33
4.5.1 Combinations of the inputs/outputs (I/Os) 33
4.5.2 Description of the CG number 34
4.5.3 Fixed, non-alterable input/output versions 35
4.5.4 Alterable input/output versions 36
4.6 Description of the inputs and outputs 37
4.6.1 Current output 37
4.6.2 Pulse output and frequency output 38
4.6.3 Status output and limit switch 39
4.6.4 Control input 40
4.6.5 Current input 41
4.7 Electrical connection of the inputs and outputs 42
4.7.1 Field housing, electrical connection of the inputs and outputs 42
4.8 Connection diagrams of inputs and outputs 43
4.8.1 Important notes 43
4.8.2 Description of the electrical symbols 44
4.8.3 Basic inputs/outputs 45
4.8.4 Modular inputs/outputs and bus systems 48
4.8.5 Ex i inputs/outputs 57
4.8.6 HART connection 62

5 Start-up 63

5.1 Switching on the power 63
5.2 Starting the signal converter 63

6 Operation 64

6.1 Display and operating elements 64
6.1.1 Display in measuring mode with 2 or 3 measured values 67
6.1.2 Display for selection of submenu and functions, 3 lines 67
6.1.3 Display when setting parameters, 4 lines 68
6.1.4 Display when previewing parameters, 4 lines 68
6.1.5 Using an IR interface (option) 69
6.2 Menu overview 70
6.3 Function tables 74
6.3.1 Menu A; quick setup 74
6.3.2 Menu B; test 75
6.3.3 Menu C; setup 77
6.3.4 Set free units 91
6.4 Description of functions 92
6.4.1 Reset counter in the menu "A quick setup" 92
6.4.2 Deleting error messages in the menu "A quick setup" 93
6.5 Error messages 94

7 Service 97

7.1 Spare parts availability ... 97
7.2 Availability of services ... 97
7.3 Returning the device to the manufacturer ... 97
7.3.1 General information ... 97
7.3.2 Form (for copying) to accompany a returned device ... 98
7.4 Disposal ... 98
7.5 Disassembly and recycling ... 99
7.6 Remove the connection and/or other cable(s) ... 101
7.7 Disassembling of the flowmeter (sensor) ... 102
7.8 Overview of the materials and components of the flowmeter sensor ... 104
7.9 Disassembling the signal converter ... 105
7.9.1 Aluminum or stainless steel C (compact) version ... 107
7.9.2 Aluminium or stainless steel F (remote) version ... 108
7.9.3 Overview of the converter materials and components ... 109

8 Technical data 112

8.1 Measuring principle ... 112
8.2 Technical data ... 113
8.3 Dimensions and weight ... 125
8.3.1 Flow sensor in carbon steel ... 126
8.3.2 Signal converter housing ... 130
8.3.3 Mounting plate of field housing ... 131

9 Description of HART interface 132

9.1 General description ... 132
9.2 Software history ... 132
9.3 Connection variants ... 133
9.3.1 Point-to-Point connection - analogue / digital mode ... 134
9.3.2 Multi-drop connection (2-wire connection) ... 135
9.3.3 Multi-drop connection (3-wire connection) ... 136
9.4 Inputs/outputs and HART dynamic variables and device variables ... 137
9.5 Remote operation ... 138
9.5.1 Online/offline operation ... 138
9.5.2 Parameters for the basic configuration ... 139
9.5.3 Units ... 139
9.6 Field Communicator 375/475 (FC 375/475) ... 140
9.6.1 Installation ... 140
9.6.2 Operation ... 140
9.7 Asset Management Solutions (AMS) ... 141
9.7.1 Installation ... 141
9.7.2 Operation ... 141
9.8 Process Device Manager (PDM) ... 142
9.8.1 Installation ... 142
9.8.2 Operation ... 142
9.9 Field Device Manager (FDM) ... 143
9.9.1 Installation ... 143
9.9.2 Operation ... 143

9.10 Field Device Tool Device Type Manager (FDT DTM) 143
9.10.1 Installation 143
9.10.2 Operation 143
9.11 HART Menu Tree 144
9.11.1 HART Menu Tree - Field Communicator HART Application 144
9.11.2 HART Menu Tree AMS - Device's context menu 145
9.11.3 HART Menu Tree PDM - Menu Bar and Working Window 146
9.11.4 HART Menu Tree FDM - Device Configuration 147
9.11.5 Description of used abbreviations 147
9.11.6 Process Variables Root Menu 148
9.11.7 Diagnostic Root Menu 149
9.11.8 Device Root Menu 151
9.11.9 Offline Root Menu 154

10 Notes 157

1.1 Software history

For all GDC devices, the "Electronic Revision" (ER) is consulted to document the revision status of the electronics according to NE 53. It is easy to see from the ER whether any fault repairs or major changes to the electronic equipment have taken place and what effect they have had on compatibility.

1	Downwards compatible changes and fault repair with no effect on operation (e.g. spelling mistakes on display)	
2-_	Downwards compatible hardware and/or software change of interfaces:	
	H	HART® version
	F	Foundation Fieldbus
	M	Modbus
	X	all interfaces
3-_	Downwards compatible hardware and/or software change of inputs and outputs	
	I	Current output
	F, P	Frequency output, pulse output
	S	Status output
	C	Control input
	CI	Current input
	X	all inputs and outputs
4	Downwards compatible changes with new functions	
5	Incompatible changes, i.e. electronic equipment must be changed	

Table 1-1: Description of changes

INFORMATION!
In the table below, "_" is a place holder for possible multi-digit alphanumeric combinations, depending on the available version.

Release date	Electronic revision	Changes and compatibility	Documentation
2010	ER 1.0.0_		MA OPTISONIC 7300 R01
2012	ER 1.1.0_		MA OPTISONIC 7300 R02
2014	ER 1.1.1_		MA OPTISONIC 7300 R03
2017-09	ER 1.1.7_	5	MA OPTISONIC 7300 R04
2021	ER 1.1.8_	4	MA OPTISONIC 7300 R05
2022	ER 1.1.8_		MA OPTISONIC 7300 R06

Table 1-2: Changes and effect on compatibility

1.2 Intended use

CAUTION!
Responsibility for the use of the measuring devices with regard to suitability, intended use and corrosion resistance of the used materials against the measured fluid lies solely with the operator.

INFORMATION!
The manufacturer is not liable for any damage resulting from improper use or use for other than the intended purpose.

The **OPTISONIC 7300** is designed exclusively for bi-directional measurement of process gases in closed completely filled pipeline circuits. Excess of contaminations (moisture, particles, 2 phases) disturb the acoustic signal and must be avoided.

The overall functionality of the gas flowmeter is the continuous measurement of actual volume flow, corrected volume flow, mass flow, molar mass, flow speed, velocity of sound, gain, SNR and diagnosis value.

1.3 Certification

Product marking

Figure 1-1: Examples of marking logo

The manufacturer certifies successful testing of the product by applying the conformity mark on the device.

This device fulfils the statutory requirements of the relevant directives.

For more information on the directives, standards and the approved certifications, please refer to the declaration of conformity supplied with the device or downloadable from the manufacturer's website.

DANGER!
For devices used in hazardous areas, additional safety notes apply. Please refer to the Ex documentation.

1.4 Safety instructions from the manufacturer

1.4.1 Copyright and data protection

The contents of this document have been created with great care. Nevertheless, we provide no guarantee that the contents are correct, complete or up-to-date.

The contents and works in this document are subject to copyright. Contributions from third parties are identified as such. Reproduction, processing, dissemination and any type of use beyond what is permitted under copyright requires written authorisation from the respective author and/or the manufacturer.

The manufacturer tries always to observe the copyrights of others, and to draw on works created in-house or works in the public domain.

The collection of personal data (such as names, street addresses or e-mail addresses) in the manufacturer's documents is always on a voluntary basis whenever possible. Whenever feasible, it is always possible to make use of the offerings and services without providing any personal data.

We draw your attention to the fact that data transmission over the Internet (e.g. when communicating by e-mail) may involve gaps in security. It is not possible to protect such data completely against access by third parties.

We hereby expressly prohibit the use of the contact data published as part of our duty to publish an imprint for the purpose of sending us any advertising or informational materials that we have not expressly requested.

1.4.2 Disclaimer

The manufacturer will not be liable for any damage of any kind by using its product, including, but not limited to direct, indirect or incidental and consequential damages.

This disclaimer does not apply in case the manufacturer has acted on purpose or with gross negligence. In the event any applicable law does not allow such limitations on implied warranties or the exclusion of limitation of certain damages, you may, if such law applies to you, not be subject to some or all of the above disclaimer, exclusions or limitations.

Any product purchased from the manufacturer is warranted in accordance with the relevant product documentation and our Terms and Conditions of Sale.

The manufacturer reserves the right to alter the content of its documents, including this disclaimer in any way, at any time, for any reason, without prior notification, and will not be liable in any way for possible consequences of such changes.

1.4.3 Product liability and warranty

The operator shall bear responsibility for the suitability of the device for the specific purpose. The manufacturer accepts no liability for the consequences of misuse by the operator. Improper installation or operation of the devices (systems) will cause the warranty to be void. The respective "Standard Terms and Conditions" which form the basis for the sales contract shall also apply.

1.4.4 Information concerning the documentation

To prevent any injury to the user or damage to the device it is essential that you read the information in this document and observe applicable national standards, safety requirements and accident prevention regulations.

If this document is not in your native language and if you have any problems understanding the text, we advise you to contact your local office for assistance. The manufacturer cannot accept responsibility for any damage or injury caused by misunderstanding of the information in this document.

This document is provided to help you establish operating conditions, which will permit safe and efficient use of this device. Special considerations and precautions are also described in the document, which appear in the form of icons as shown below.

1.4.5 Warnings and symbols used

Safety warnings are indicated by the following symbols.

DANGER!
This warning refers to the immediate danger when working with electricity.

DANGER!
This warning refers to the immediate danger of burns caused by heat or hot surfaces.

DANGER!
This warning refers to the immediate danger when using this device in a hazardous atmosphere.

DANGER!
These warnings must be observed without fail. Even partial disregard of this warning can lead to serious health problems and even death. There is also the risk of seriously damaging the device or parts of the operator's plant.

WARNING!
Disregarding this safety warning, even if only in part, poses the risk of serious health problems. There is also the risk of damaging the device or parts of the operator's plant.

CAUTION!
Disregarding these instructions can result in damage to the device or to parts of the operator's plant.

INFORMATION!
These instructions contain important information for the handling of the device.

LEGAL NOTICE!
This note contains information on statutory directives and standards.

- HANDLING
  This symbol designates all instructions for actions to be carried out by the operator in the specified sequence.

➲ RESULT
This symbol refers to all important consequences of the previous actions.

1.5 Safety instructions for the operator

WARNING!
In general, devices from the manufacturer may only be installed, commissioned, operated and maintained by properly trained and authorized personnel.
This document is provided to help you establish operating conditions, which will permit safe and efficient use of this device.

2.1 Scope of delivery

INFORMATION!
Do a check of the packing list to make sure that you have all the elements given in the order.

INFORMATION!
Inspect the packaging carefully for damages or signs of rough handling. Report damage to the carrier and to the local office of the manufacturer.

INFORMATION!
The field device will arrive in two cartons. One carton contains the converter and one carton contains the sensor.
Make sure to combine the correct devices together by comparing the serial numbers

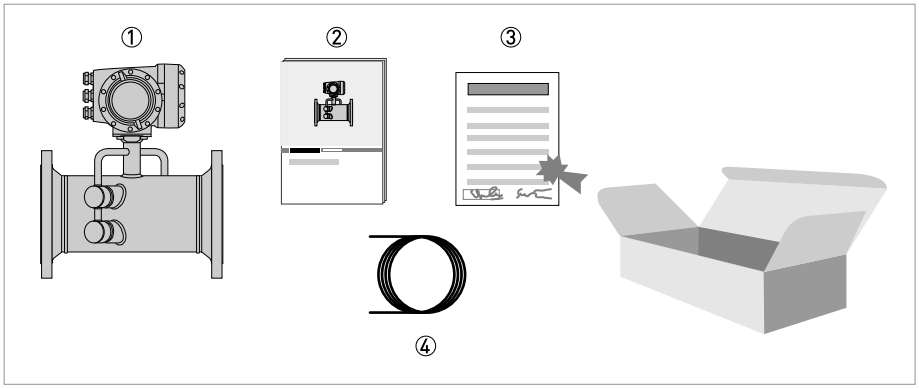

Figure 2-1: Scope of delivery

① Ordered flowmeter
② Product documentation
③ Factory calibration certificate
④ Signal cables (remote versions only)

INFORMATION!
Assembly materials and tools are not part of the delivery. Use the assembly materials and tools in compliance with the applicable occupational health and safety directives.

2.2 Device description

The ultrasonic flowmeters are designed exclusively for the continuous measurement of actual volume flow, corrected volume flow, mass flow, molar mass, flow speed, velocity of sound, gain, SNR and diagnosis value.

Your measuring device is supplied ready for operation. The factory settings for the operating data have been made in accordance with your order specifications.

INFORMATION!
Product specific information and extensive product specification is available using PICK, the Product Information Center KROHNE web-tool.
PICK can be found via the service menu button on the KROHNE.com website.
Scan the auto ID code (data matrix) on the device nameplate to download all product specific information.

PICK up your information

The following versions are available:

- Compact version (the signal converter is mounted directly on the flow sensor)
- Remote version (electrical connection to the flow sensor via signal cable)

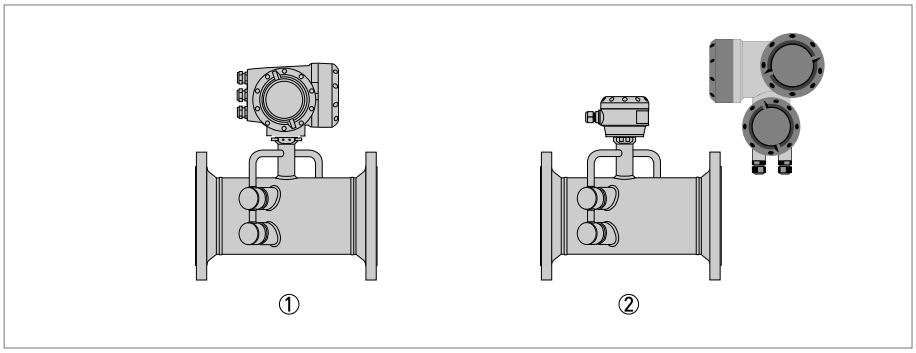

Figure 2-2: Device versions

① Compact version
② Remote version

2.2.1 Field housing

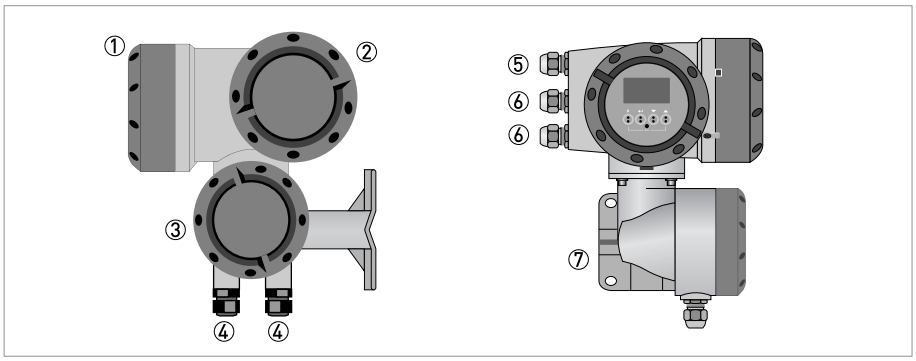

Figure 2-3: Construction of the field housing for remote versions

① Cover for electronics and display
② Cover for power supply and inputs/outputs terminal compartment
③ Cover for flow sensor terminal compartment
④ Cable entry for signal cable
⑤ Cable entry for power supply
⑥ Cable entry for inputs and outputs
⑦ Mounting plate for pipe and wall mounting

INFORMATION!
Each time a housing cover is opened, the thread should be cleaned and greased.
Use only resin-free and acid-free grease.
Ensure that the housing gasket is properly fitted, clean and undamaged.

2.3 Nameplates

INFORMATION!
Look at the device nameplate to ensure that the device is delivered according to your order. Check for the correct supply voltage printed on the nameplate.

2.3.1 Example of nameplate for the compact version

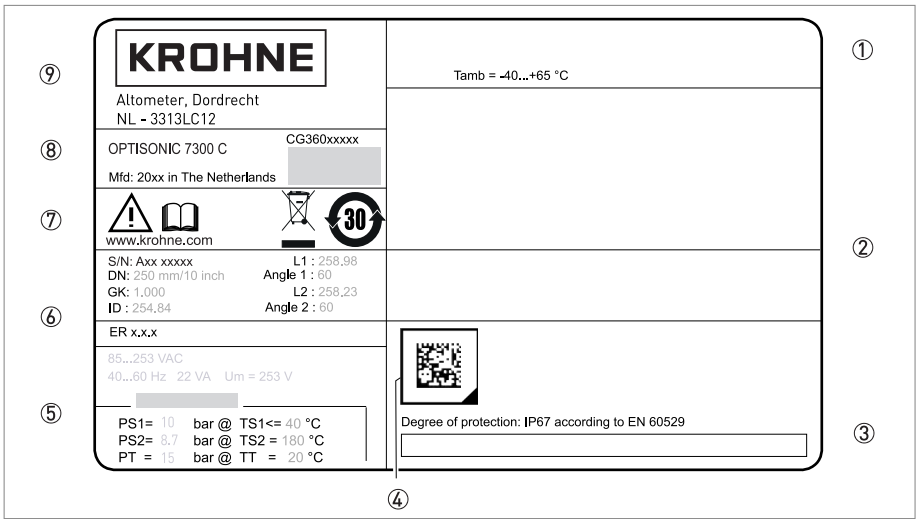

① Ambient temperature
② Space for additional information
③ Protection class and Tag number
④ Data matrix
⑤ Main supply and PED data
⑥ Calibration data and electronics revision number (ER)
⑦ Info / web address and disposal logo
⑧ Type designation and manufacturer date of the flowmeter / Conformity mark (e.g. CE/UKCA) with number(s) of notified body/bodies
⑨ Name and address of the manufacturer

Auto ID according to DIN specifications

The auto ID code (data matrix) guides you directly to the PICK server (Product Information Center KROHNE).
Scan the auto ID code on the device nameplate to download all product specific information.

- Handbooks, Quick Starts and Supplementary instructions
- Calibration certificates
- Factory settings as bin file
- Parameter data sheets
- Digital nameplates

2.3.2 Example of nameplate for the flow sensor (remote version)

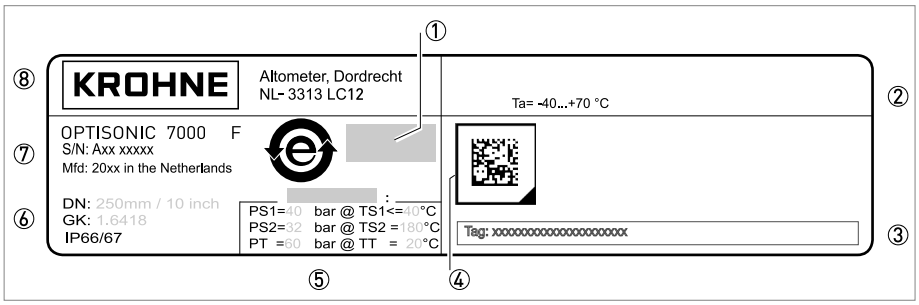

Figure 2-4: Example of nameplate

① Conformity mark (e.g. CE/UKCA) with number(s) of notified body/bodies and disposal logo
② Ambient temperature
③ Tag number
④ Data matrix
⑤ PED data, Category I / II / III or SEP
⑥ Protection category, size and GK information
⑦ Type designation of the flowmeter and manufacturing date
⑧ Name and address of the manufacturer

2.3.3 Examples of nameplates on the signal converter

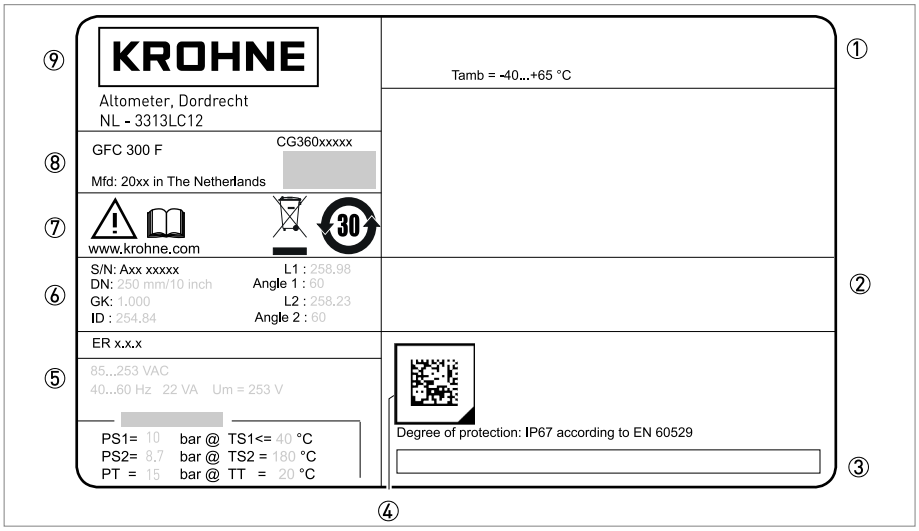

Figure 2-5: Example of nameplate

① Ambient temperature
② Space for additional information
③ Protection class and Tag number
④ Data matrix
⑤ Main supply and PED data
⑥ Calibration data and electronics revision number (ER)
⑦ Info / web address and disposal logo
⑧ Type designation and manufacturer date of the flowmeter
/ Conformity mark (e.g. CE/UKCA) with number(s) of notified body/bodies
⑨ Name and address of the manufacturer

Electrical connection data of inputs/outputs (example of basic version)

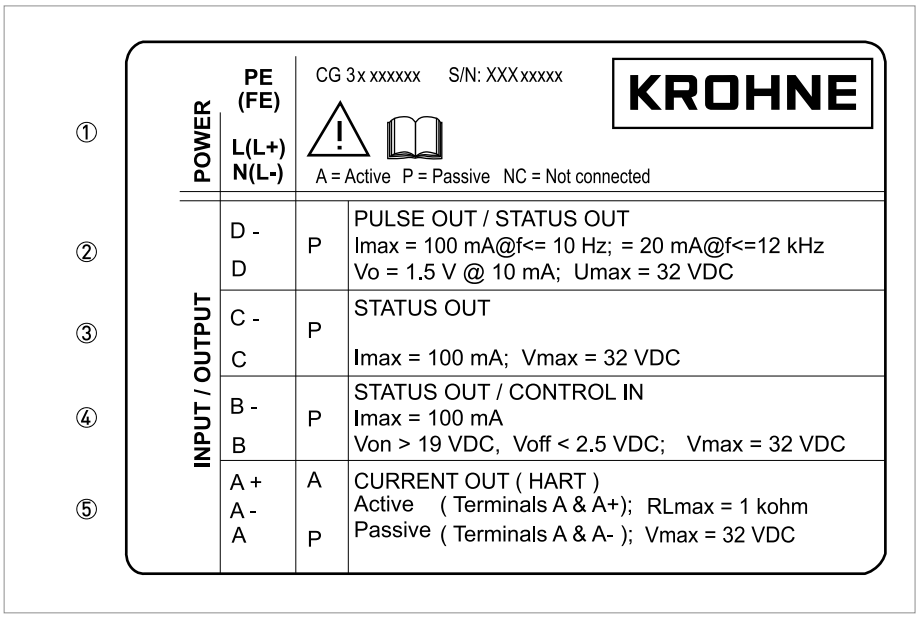

Figure 2-6: Example of a nameplate for electrical connection data of inputs and outputs

① Power supply (AC: L and N; DC: L+ and L-; PE for ≥ 24 VAC; FE for ≤ 24 VAC and DC)
② Connection data of connection terminal D/D-
③ Connection data of connection terminal C/C-
④ Connection data of connection terminal B/B-
⑤ Connection data of connection terminal A/A-; A+ only operable in the basic version

- A = active mode; the signal converter supplies the power for connection of the subsequent devices
- P = passive mode; external power supply required for operation of the subsequent devices
- N/C = connection terminals not connected

WARNING!
Do not use the terminals A+ and A- at the same time. The system will be damaged by the direct voltage of 24 VDC and a 1 A peak current.

3.1 General notes on installation

INFORMATION!
Inspect the packaging carefully for damages or signs of rough handling. Report damage to the carrier and to the local office of the manufacturer.

INFORMATION!
Do a check of the packing list to make sure that you have all the elements given in the order.

INFORMATION!
Look at the device nameplate to ensure that the device is delivered according to your order. Check for the correct supply voltage printed on the nameplate.

3.2 Storage

- Store the device in a dry, dust-free location.
- Avoid continuous direct sunlight.
- Store the device in its original packaging.
- Storage temperature: -50...+70°C / -58...+158°F

3.3 Transport

Signal converter

- Do not lift the signal converter by the cable glands.

Flow sensor

- Do not lift the flow sensor by the connection box, transducers nozzles or wiring conduits.
- To transport flange devices, use lifting lugs or lift the device with suitable hoisting belts. Wrap these around both process connections.
- Lift the device in the correct mounting position only.

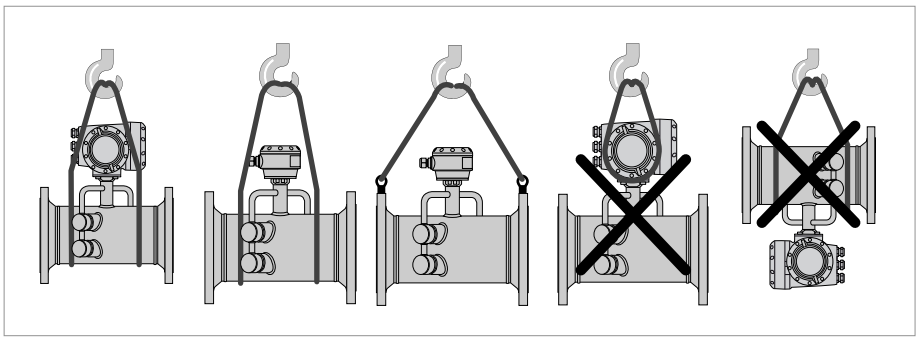

Figure 3-1: Transport

3.4 Pre-installation requirements

INFORMATION!
To assure a quick, safe and uncomplicated installation, we kindly request you to make provisions as stated below.

Make sure that you have all necessary tools available:

- Allen key (4 and 5 mm)
- Set of screwdrivers
- Wrench for cable glands and for pipe mounting bracket (remote version only); refer to *Pipe mounting* on page 25

3.5 General requirements

INFORMATION!
The following precautions must be taken to ensure a reliable installation.

- *Make sure that there is adequate space on the sides.*
- *Protect the signal converter from direct sunlight and install a sunshade if necessary.*
- *Signal converters installed in control cabinets require adequate cooling, e.g. by fan or heat exchanger.*
- *Do not expose the signal converter to intense vibrations and mechanical shocks. The measuring devices are tested for a vibration/shock level as described in the chapter "Technical data".*

3.5.1 Vibration

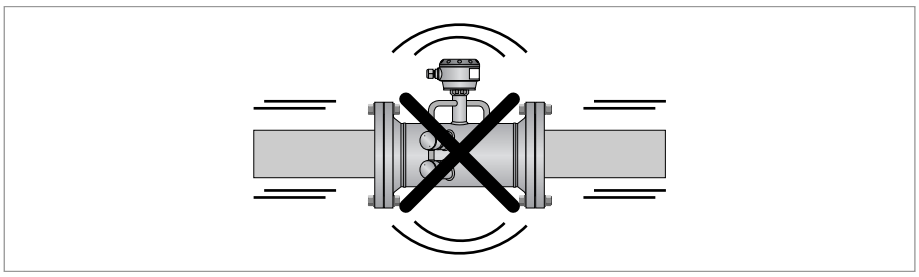

Figure 3-2: Prevent intense vibrations

INFORMATION!
In case of too many vibrations, please install supports on both sides of the flowmeter to minimize movement.

3.6 Installation requirements for the flow sensor

To secure the optimum functioning of the flowmeter, please note the following observations.

The OPTISONIC 7300 is designed for the measurement dry gas flow. Excess of liquids may disturb the acoustic signals and should thus be avoided.
The following guidelines should be observed in case occasional small amounts of liquids are to be expected:

- Install the flow sensor in a horizontal position in a slightly descending line.
- Orientate the flow sensor such that the path of the acoustic signal is in the horizontal plane.

For exchanging the transducers, please keep a free space of 1 m / 39" around the transducer.

3.7 Installation conditions

3.7.1 Inlet and outlet

1 path flowmeter

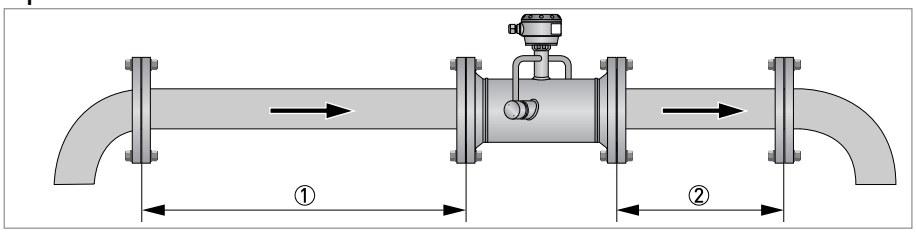

Figure 3-3: Recommended inlet and oulet for ≤ DN80 / 3"

① Refer to chapter "Bends in 2 or 3 dimensions"
② ≥ 3 DN

2 path flowmeter

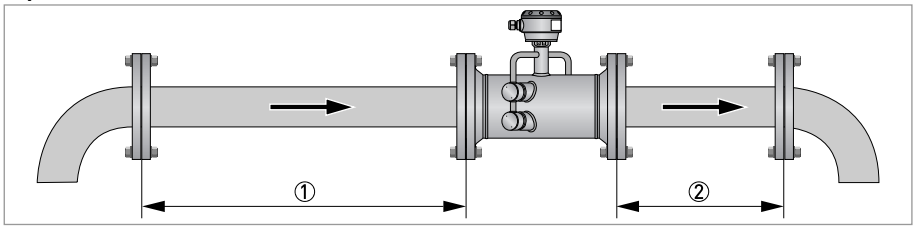

Figure 3-4: Recommended inlet and oulet for ≥ DN100 / 4"

① Refer to chapter "Bends in 2 or 3 dimensions"
② ≥ 3 DN

3.7.2 Bends in 2 or 3 dimensions

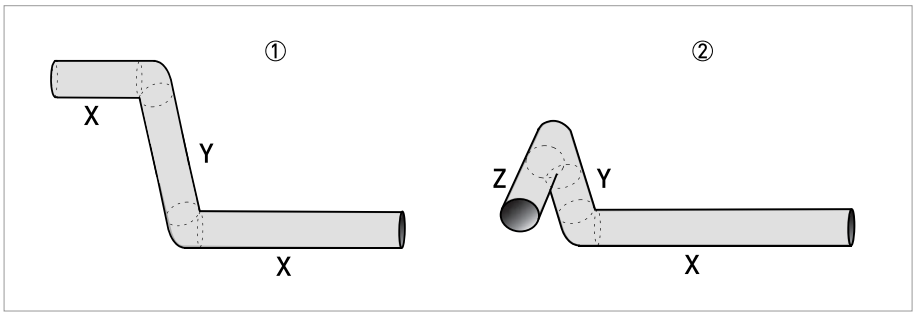

Figure 3-5: 2 and/or 3 dimensional bends upstream of the flowmeter

① 2 dimensions = X/Y
② 3 dimensions = X/Y/Z
Inlet length:
for 2 path using bends in 2 dimensions: ≥ 10 DN; when having bends in 3 dimensions: ≥ 15 DN
for 1 path using bends in 2 dimensions: ≥ 20 DN; when having bends in 3 dimensions: ≥ 25 DN

INFORMATION!
*2 dimensional bends occur in a vertical **or** horizontal plane (X/Y) only, while 3 dimensional bends occur in both vertical **and** horizontal plane (X/Y/Z).*

3.7.3 T-section

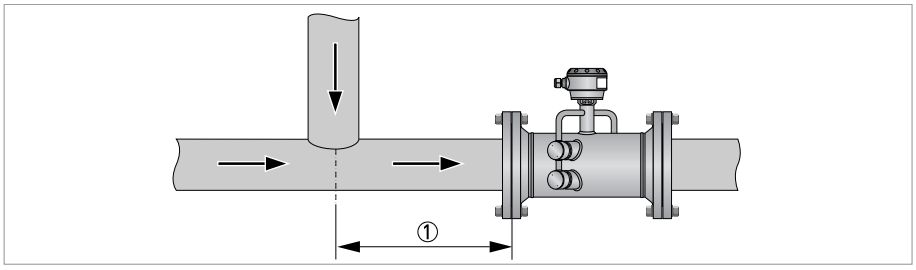

Figure 3-6: Distance behind a T-section

① 2 path ≥ 10 DN, 1 path ≥ 20 DN

3.7.4 Control valve

CAUTION!
When a restriction (valve or reducer) is installed in the same pipeline with the flowmeter and noise is expected, please contact the manufacturer.

To prevent flow disturbances in the flowmeter a control valve is installed downstream of the flowmeter.

If a control valve is installed upstream of the flowmeter position, an extended straight inlet pipe (up to 50 DN) is recommended, depending on the process and control valve type.

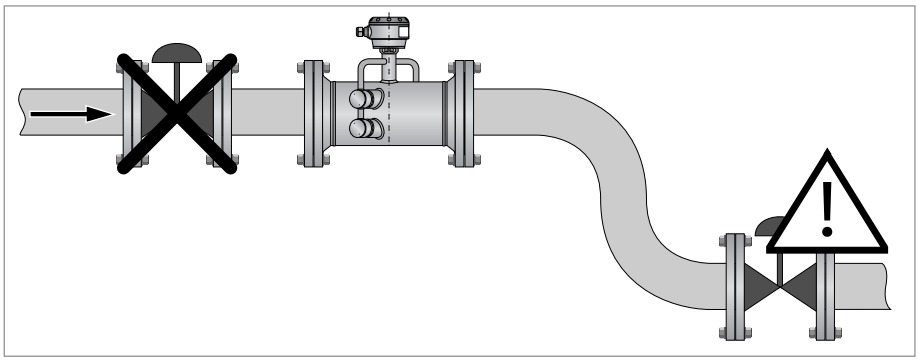

Figure 3-7: Installation of the flowmeter and a valve/reducer in the same pipeline

3.7.5 Flange deviation

CAUTION!
Max. permissible deviation of pipe flange faces:
$L_{max} - L_{min} \leq 0.5$ *mm / 0.02"*

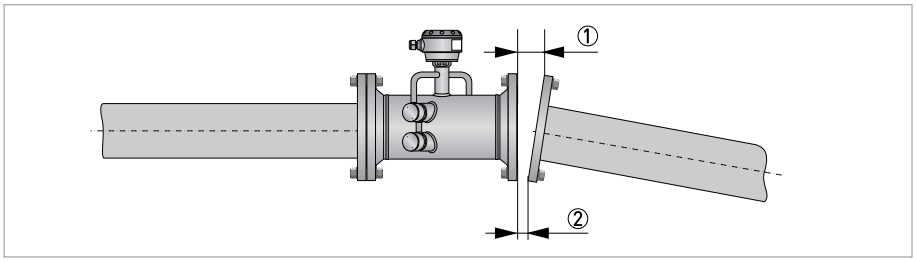

Figure 3-8: Flange deviation

① L_{max}
② L_{min}

3.7.6 Installation position

- Horizontal: install the flow sensor in a horizontal position in case of the presence of liquids.
- Vertically

+15° < α < -15°

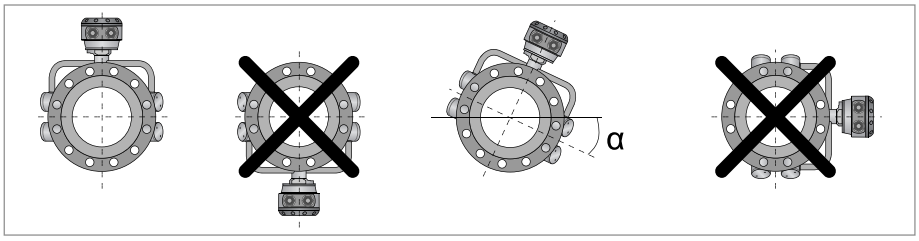

Figure 3-9: Installation position

- Horizontal or vertical: allowed installation position in case of dry gas.

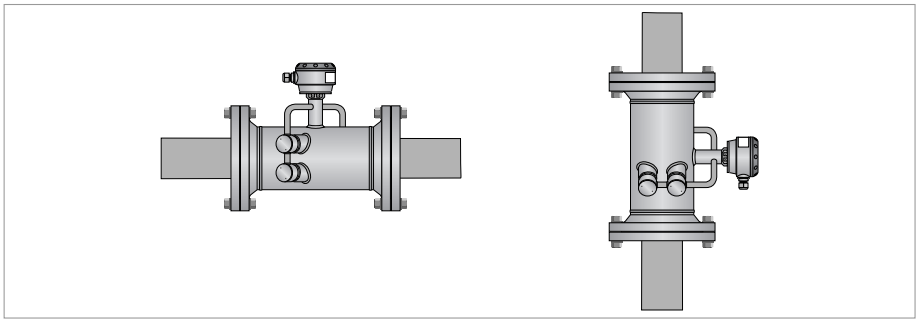

Figure 3-10: Horizontal and vertical installation

3.7.7 Thermal insulation

DANGER!
For devices in hazardous area, additional maximum temperature and insulation precautions apply. Please refer to the Ex documentation.

WARNING!
Always leave vent holes ③ free!

CAUTION!
The flow sensor can be insulated completely, except for the transducers ① and the connection box ② to allow cooling by free air convection.

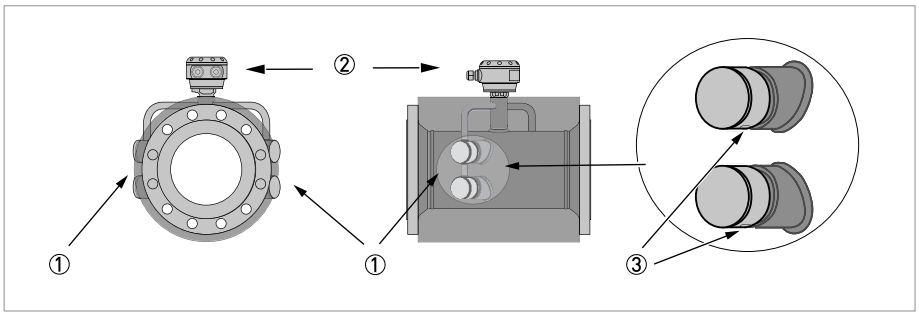

Figure 3-11: Leave vent holes free

① Transducers
② Connection box
③ Vent holes

3.8 Mounting the field housing, remote version

INFORMATION!
Assembly materials and tools are not part of the delivery. Use the assembly materials and tools in compliance with the applicable occupational health and safety directives.

3.8.1 Pipe mounting

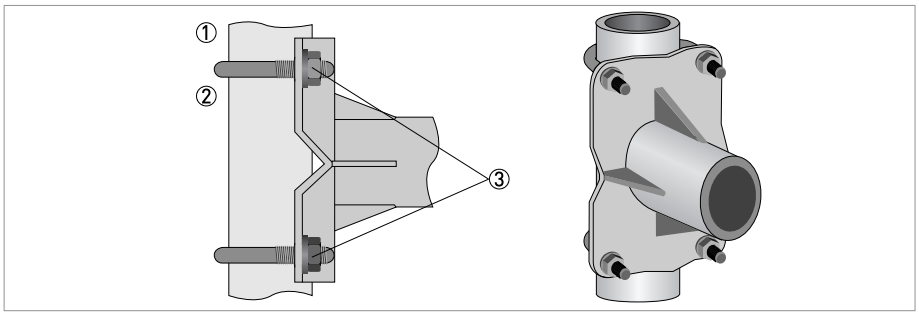

Figure 3-12: Pipe mounting of the field housing

① Fix the signal converter to the pipe.
② Fasten the signal converter using standard U-bolts and washers.
③ Tighten the nuts.

3.8.2 Wall mounting

Mounting the remote version (F) on the wall

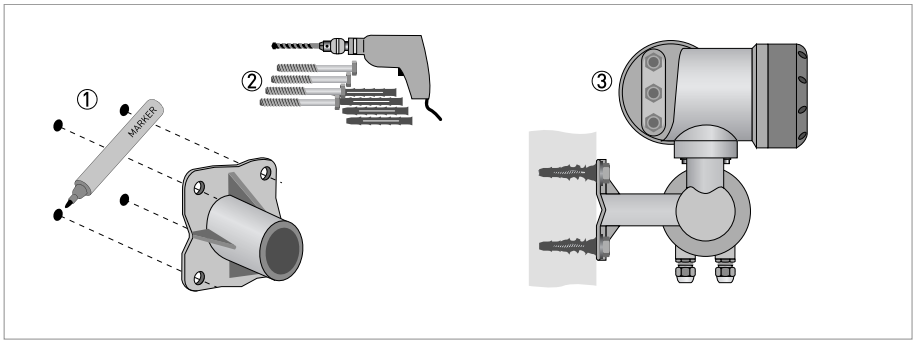

Figure 3-13: Wall mounting of the field housing

① Prepare the holes with the aid of the mounting plate.
Further information refer to *Mounting plate of field housing* on page 131.
② Use the mounting material and tools in compliance with the applicable occupational health and safety directives.
③ Fasten the housing securely to the wall.
④ Screw the signal converter to the mounting plate with the nuts and washers.

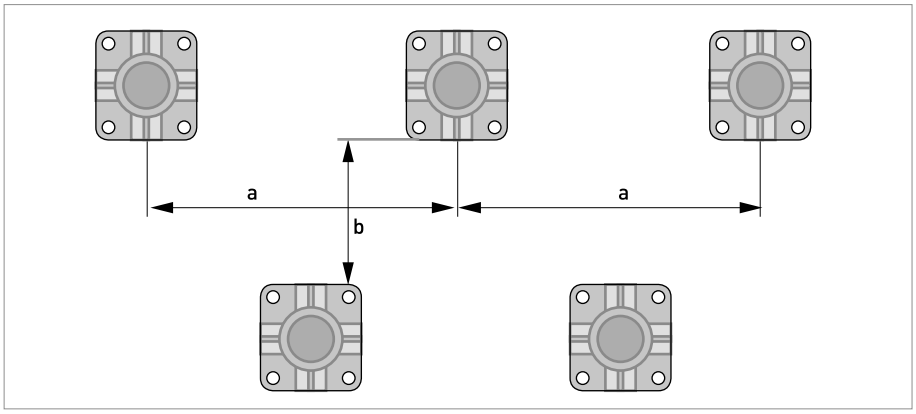

Figure 3-14: Mounting multiple devices next to each other

a ≥ 600 mm / 23.6"
b ≥ 250 mm / 9.8"

3.8.3 Turning the display (field and compact version only)

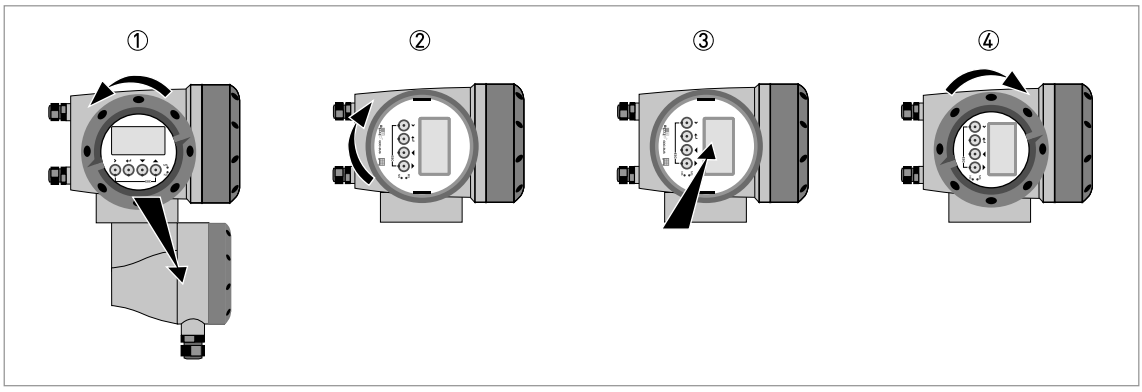

Figure 3-15: Turning the display (field and compact version only)

The display of the field housing version can be turned in 90° increments

① Unscrew the cover from the display and operation control unit.
② Pull out the display and rotate it to the required position.
③ Slide the display back into the housing.
④ Re-fit the cover and tighten it by hand.

CAUTION!
The ribbon cable of the display must not be folded or twisted repeatedly.

INFORMATION!
Each time a housing cover is opened, the thread should be cleaned and greased.
Use only resin-free and acid-free grease.
Ensure that the housing gasket is properly fitted, clean and undamaged.

4.1 Safety instructions

DANGER!
All work on the electrical connections may only be carried out with the power disconnected. Take note of the voltage data on the nameplate!

DANGER!
Observe the national regulations for electrical installations!

DANGER!
For devices used in hazardous areas, additional safety notes apply; please refer to the Ex documentation.

WARNING!
Observe without fail the local occupational health and safety regulations.
Any work done on the electrical components of the measuring device may only be carried out by properly trained specialists.

INFORMATION!
Look at the device nameplate to ensure that the device is delivered according to your order. Check for the correct supply voltage printed on the nameplate.

4.2 Laying electrical cables correctly

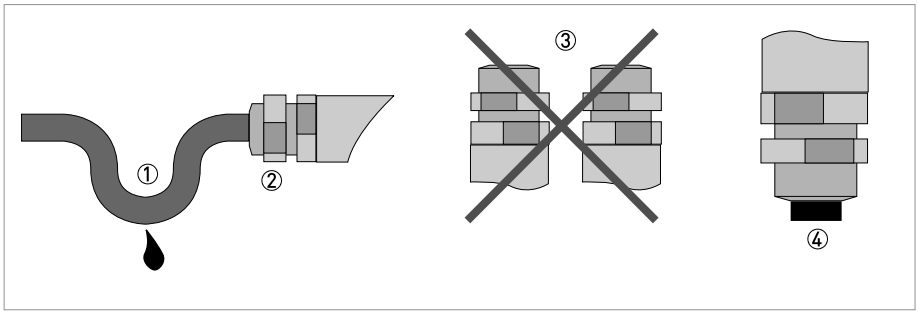

Figure 4-1: Protect housing from dust and water

① Lay the cable in a loop just before the housing.
② Tighten the screw connection of the cable entry securely.
③ Never mount the housing with the cable entries facing upwards.
④ Seal cable entries that are not needed with a plug.

4.3 Connection of signal cable to signal converter (remote version only)

The flow sensor is connected to the signal converter via one or two signal cables, with 2 inner Triax cables for the connection of one or two acoustic path(s). A flow sensor with one acoustic path has one cable. A flow sensor with two acoustic paths has two cables.

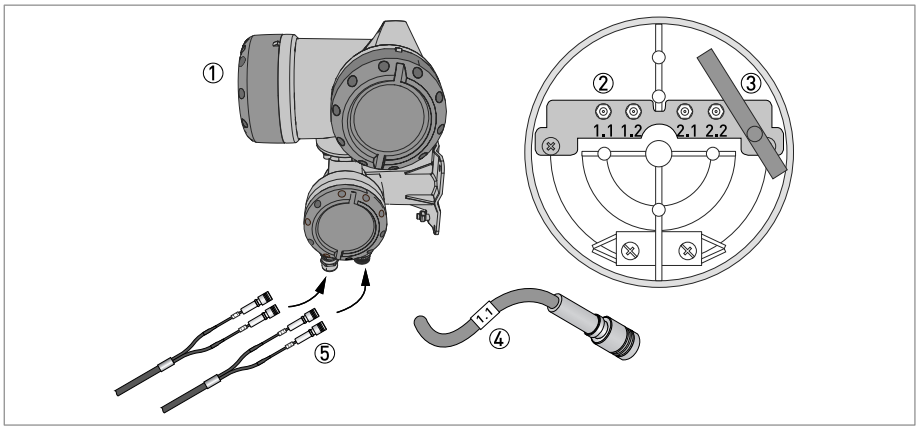

Figure 4-2: Connection of signal cable to signal converter

① Signal converter
② Open connection box
③ Tool for releasing connectors
④ Marking on cable
⑤ Insert cable (1 path flowmeter) or cables (2 path flowmeter) through cable glands

CAUTION!
To ensure smooth functioning and safe instrument usage, always use the signal cable(s) included in the delivery.

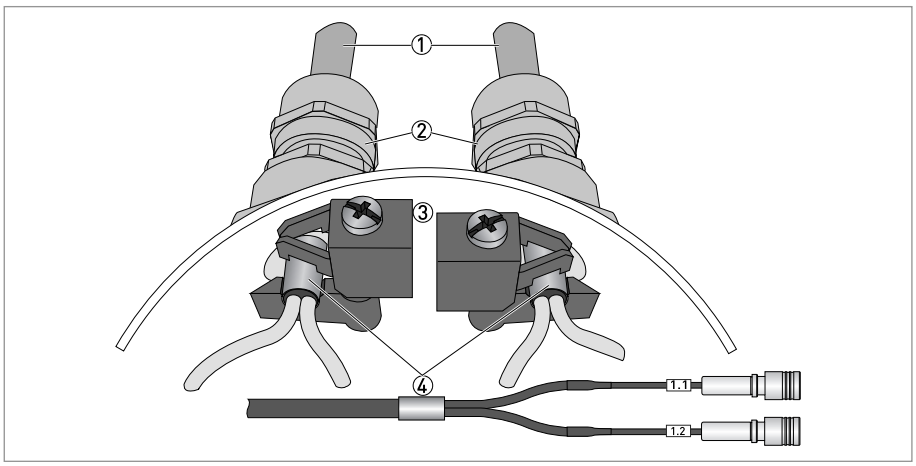

Figure 4-3: Clamp the cables on the shielding bush

① Cables
② Cable glands
③ Grounding clamps
④ Cable with metal shielding bush

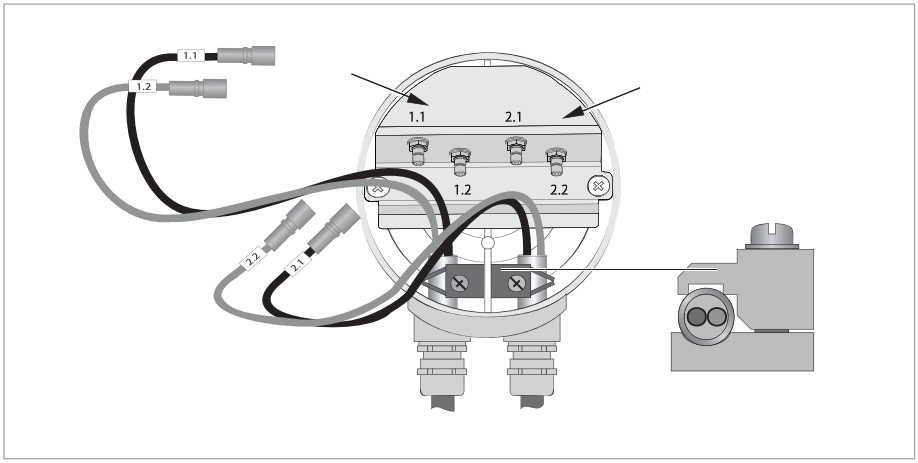

Figure 4-4: Connect the cables in the connection box of the sensor

INFORMATION!
Connect the cable on connector with similar numeral marking

4.4 Power supply connection

DANGER!
For devices used in hazardous areas, additional safety notes apply; please refer to the Ex documentation.

WARNING!
When this device is intended for permanent connection to the mains.
It is required (for example for service) to mount an external switch or circuit breaker near the device for disconnection from the mains. It shall be easily reachable by the operator and marked as the disconnecting the device for this equipment.
The switch or circuit breaker and wiring has to be suitable for the application and shall also be in accordance with the local (safety) requirements of the (building) installation (e.g. IEC 60947-1/-3)

INFORMATION!
The power terminals in the terminal compartments are equipped with additional hinged lids to prevent accidental contact.

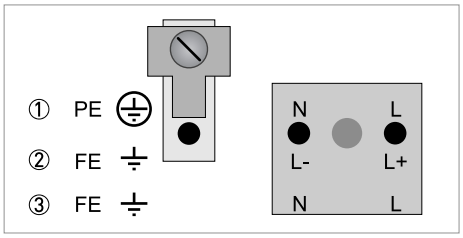

Figure 4-5: Power supply connection

① 100...230 VAC (-15% / +10%), 22 VA
② 24 VDC (-55% / +30%), 12 W
③ 24 VAC/DC (AC: -15% / +10%; DC: -25% / +30%), 22 VA or 12 W

Grounding of remote version

DANGER!
The device must be grounded in accordance with regulations in order to protect personnel against electric shocks.

For EMC reasons, connect the converter housing to a sufficiently low impedance grounding. If necessary, the external U-clamp (size M5) of the converter housing can be used for this purpose.

100...230 VAC (tolerance range for 100 VAC: -15% / +10%)

- Note the power supply voltage and frequency (50...60 Hz) on the nameplate.
- The protective ground terminal **PE** of the power supply must be connected to the separate U-clamp terminal in the terminal compartment of the signal converter

INFORMATION!
240 VAC + 5% is included in the tolerance range.

24 VDC (tolerance range: -55% / +30%)
24 VAC/DC (tolerance range: AC: -15% / +10%; DC: -25% / +30%)

- Note the data on the nameplate!
- For measurement process reasons, a functional ground **FE** must be connected to the separate
  U-clamp terminal in the terminal compartment of the signal converter.
- When connecting to functional extra-low voltages, provide a facility for protective separation (PELV) (according to VDE 0100 / VDE 0106 and/or IEC 60364 / IEC 61140 or relevant national regulations)

4.5 Inputs and outputs, overview

4.5.1 Combinations of the inputs/outputs (I/Os)

This signal converter is available with various input/output combinations.

Basic version

- Has 1 current output, 1 pulse output and 2 status outputs/limit switches.
- The pulse output can be set as status output/limit switch and one of the status outputs as a control input.

Ex i version

- Depending on the task, the device can be configured with various input and output modules.
- Current outputs can be active or passive.
- Current inputs are active.
- Optionally available with Foundation Fieldbus.

Modular version

- Depending on the task, the device can be configured with various input and output modules.
- Current inputs and outputs can be active or passive.
- Optionally available with Foundation Fieldbus or RS 485 Modbus.

Bus systems

- The device allows intrinsically safe and non intrinsically safe bus interfaces in combination with additional modules.
- For connection and operation of bus systems, please note the supplementary documentation.

Ex option

- For hazardous areas, all of the input/output variants for the housing designs with a terminal compartment in the Ex d (pressure-resistant casing) or Ex e (increased safety) versions can be delivered.
- For connection and operation of Ex devices, note the supplementary instructions.

4.5.2 Description of the CG number

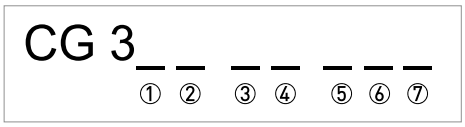

Figure 4-6: Marking (CG number) of the electronics module and input/output variants

① ID number: 6
② ID number: 0 = standard
③ Power supply option
④ Display (language versions)
⑤ Input/output version (I/O)
⑥ 1st optional module for connection terminal A
⑦ 2nd optional module for connection terminal B

The last 3 digits of the CG number (⑤ , ⑥ and ⑦) indicate the assignment of the terminal connections. Please see the following examples.

Examples for CG number

CG 360 11 100	100...230 VAC & standard display; basic I/O: I_a or I_p & S_p/C_p & S_p & P_p/S_p
CG 360 11 7FK	100...230 VAC & standard display; modular I/O: I_a & P_N/S_N and optional module P_N/S_N & C_N
CG 360 81 4EB	24 VDC & standard display; modular I/O: I_a & P_a/S_a and optional module P_p/S_p & I_p

Abbreviation	Identifier for CG no.	Description
I_a	A	Active current output
I_p	B	Passive current output
P_a / S_a	C	Active pulse output, frequency output, status output or limit switch (changeable)
P_p / S_p	E	Passive pulse output, frequency output, status output or limit switch (changeable)
P_N / S_N	F	Passive pulse output, frequency output, status output or limit switch according to NAMUR (changeable)
C_a	G	Active control input
C_p	K	Passive control input
C_N	H	Active control input to NAMUR Signal converter monitors cable breaks and short circuits according to EN 60947-5-6. Errors indicated on LC display. Error messages possible via status output.
IIn_a	P	Active current input (for Modular I/O)
IIn_p	R	Passive current input (for Modular I/O)
2 x IIn_a	5	Two active current inputs (for Ex i I/O)
-	8	No additional module installed
-	0	No further module possible

Table 4-1: Description of abbreviations and CG identifier for possible optional modules on terminals A and B

4.5.3 Fixed, non-alterable input/output versions

This signal converter is available with various input/output combinations.

- The grey boxes in the tables denote unassigned or unused connection terminals.
- In the table, only the final digits of the CG no. are depicted.
- Connection terminal A+ is only operable in the basic input/output version.

CG no.	Connection terminals								
	A+	A	A-	B	B-	C	C-	D	D-

Basic I/Os (standard)

1 0 0		I_p + HART® passive ①	S_p / C_p passive ②	S_p passive	P_p / S_p passive ②
	I_a + HART® active ①				

Ex i I/Os (option)

2 0 0				I_a + HART® active	P_N / S_N NAMUR ②
3 0 0				I_p + HART® passive	P_N / S_N NAMUR ②
2 1 0		I_a active	P_N / S_N NAMUR C_p passive ②	I_a + HART® active	P_N / S_N NAMUR ②
3 1 0		I_a active	P_N / S_N NAMUR C_p passive ②	I_p + HART® passive	P_N / S_N NAMUR ②
2 2 0		I_p passive	P_N / S_N NAMUR C_p passive ②	I_a + HART® active	P_N / S_N NAMUR ②
3 2 0		I_p passive	P_N / S_N NAMUR C_p passive ②	I_p + HART® passive	P_N / S_N NAMUR ②
2 3 0		IIn_a active	P_N / S_N NAMUR C_p passive ②	I_a + HART® active	P_N / S_N NAMUR ②
3 3 0		IIn_a active	P_N / S_N NAMUR C_p passive ②	I_p + HART® passive	P_N / S_N NAMUR ②
2 4 0		IIn_p passive	P_N / S_N NAMUR C_p passive ②	I_a + HART® active	P_N / S_N NAMUR ②
3 4 0		IIn_p passive	P_N / S_N NAMUR C_p passive ②	I_p + HART® passive	P_N / S_N NAMUR ②
2 5 0		IIn_a active	IIn_a active		

① Function changed by reconnecting
② Changeable

4.5.4 Alterable input/output versions

This signal converter is available with various input/output combinations.

- The grey boxes in the tables denote unassigned or unused connection terminals.
- In the table, only the final digits of the CG no. are depicted.
- Term. = (connection) terminal

CG no.	Connection terminals								
	A+	A	A-	B	B-	C	C-	D	D-

Modular IOs (option)

4 _ _		max. 2 optional modules for term. A + B		I_a + HART® active		P_a / S_a active ①	
8 _ _		max. 2 optional modules for term. A + B		I_p + HART® passive		P_a / S_a active ①	
6 _ _		max. 2 optional modules for term. A + B		I_a + HART® active		P_p / S_p passive ①	
B _ _		max. 2 optional modules for term. A + B		I_p + HART® passive		P_p / S_p passive ①	
7 _ _		max. 2 optional modules for term. A + B		I_a + HART® active		P_N / S_N NAMUR ①	
C _ _		max. 2 optional modules for term. A + B		I_p + HART® passive		P_N / S_N NAMUR ①	

FOUNDATION Fieldbus (option)

E _ _		max. 2 optional modules for term. A + B	V/D+ (2)	V/D- (2)	V/D+ (1)	V/D- (1)

Modbus (option)

G _ _ ②		max. 2 optional modules for term. A + B		Common	Sign. B (D1)	Sign. A (D0)

① Changeable
② Not activated bus terminator

4.6 Description of the inputs and outputs

4.6.1 Current output

INFORMATION!
The current outputs must be connected depending on the version! The I/O version and inputs/outputs installed in your signal converter are indicated on the sticker in the cover of the terminal compartment.

- All outputs are electrically isolated from each other and from all other circuits.
- All operating data and functions can be adjusted.
- Passive mode:
  External power $V_{ext} \leq 32$ VDC at $I \leq 22$ mA
- Active mode:
  Load impedance $R_L \leq 1$ kΩ at $I \leq 22$ mA;
  $R_L \leq 450$ Ω at $I \leq 22$ mA for Ex i outputs
- Self-monitoring: interruption or load impedance too high in the current output loop
- Error message possible via status output, error indication on LC display.
- Current value error detection can be adjusted.
- Automatic range conversion via threshold or control input. The setting range for the threshold is between 5 and 80% of $Q_{100\%}$, ± 0...5% hysteresis (corresponding ratio from smaller to larger range of 1:20 to 1:1.25).
  Signaling of the active range possible via a status output (adjustable).
- Forward/reverse flow measurement (F/R mode) is possible.

INFORMATION!
For further information refer to Connection diagrams of inputs and outputs on page 43.

DANGER!
For devices used in hazardous areas, additional safety notes apply; please refer to the Ex documentation.

4.6.2 Pulse output and frequency output

INFORMATION!
Depending on the version, the pulse and frequency outputs must be connected passively or actively or according to IEC 60947-5-6 (NAMUR)! The I/O version and inputs/outputs installed in your signal converter are indicated on the sticker in the cover of the terminal compartment.

- All outputs are electrically isolated from each other and from all other circuits.
- All operating data and functions can be adjusted.
- Passive mode:
  External power supply required: $V_{ext} \leq 32$ VDC
  $I \leq 20$ mA at $f \leq 10$ kHz (over range up to $f_{max} \leq 12$ kHz)
  $I \leq 100$ mA at $f \leq 100$ Hz
- Active mode:
  Use of the internal power supply: $V_{nom} = 24$ VDC
  $I \leq 20$ mA at $f \leq 10$ kHz (over range up to $f_{max} \leq 12$ kHz)
  $I \leq 20$ mA at $f \leq 100$ Hz
- NAMUR mode: passive in accordance with IEC 60947-5-6, $f \leq 10$ kHz, over range up to $f_{max} \leq 12$ kHz
- Scaling:
  Frequency output: in pulses per time unit (e.g. 1000 pulses/s at $Q_{100\%}$);
  Pulse output: value per pulse.
- Pulse width:
  symmetric (pulse duty factor 1:1, independent of output frequency)
  automatic (with fixed pulse width, duty factor approx. 1:1 at $Q_{100\%}$) or
  fixed (pulse width adjustable as required from 0.05 ms...2 s)
- Forward/reverse flow measurement (F/R mode) is possible.
- All pulse and frequency outputs can also be used as a status output / limit switch.

INFORMATION!
For further information refer to Connection diagrams of inputs and outputs on page 43.

DANGER!
For devices used in hazardous areas, additional safety notes apply; please refer to the Ex documentation.

4.6.3 Status output and limit switch

INFORMATION!
Depending on the version, the status outputs and limit switches must be connected passively or actively or according to IEC 60947-5-6 (NAMUR)! The I/O version and inputs/outputs installed in your signal converter are indicated on the sticker in the cover of the terminal compartment.

- The status outputs / limit switches are electrically isolated from each other and from all other circuits.
- The output stages of the status outputs/limit switches during simple active or passive operation behave like relay contacts and can be connected with any polarity.
- All operating data and functions can be adjusted.
- Passive mode:
  External power supply required: $V_{ext} \leq 32$ VDC; $I \leq 100$ mA

  For the Ex i I/O signal converter:
  NAMUR characteristic: 4.7 mA / 0.77 mA
- Active mode:
  Use of the internal power supply: $V_{nom} = 24$ VDC; $I \leq 20$ mA
- For information on the adjustable operating states refer to *Function tables* on page 74.

INFORMATION!
For further information refer to Connection diagrams of inputs and outputs on page 43.

DANGER!
For devices used in hazardous areas, additional safety notes apply; please refer to the Ex documentation.

4.6.4 Control input

INFORMATION!
Depending on the version, the control inputs must be connected passively or actively or according to IEC 60947-5-6 (NAMUR)! The I/O version and inputs/outputs installed in your signal converter are indicated on the sticker in the cover of the terminal compartment.

- All control inputs are electrically isolated from each other and from all other circuits.
- All operating data and functions can be adjusted.
- Passive mode:
  External power supply required: $V_{ext} \leq 32$ VDC
- Active mode:
  Use of the internal power supply: $V_{nom} = 24$ VDC
- NAMUR mode:
  Passive in accordance with IEC 60947-5-6
  Active control input according to IEC 60947-5-6 (NAMUR): signal converter monitors cable breaks and short circuits according to IEC 60947-5-6. Errors indicated on LC display.
  Error messages possible via status output.
- For information on the adjustable operating states refer to *Function tables* on page 74.

INFORMATION!
For further information refer to Connection diagrams of inputs and outputs on page 43.

DANGER!
For devices used in hazardous areas, additional safety notes apply; please refer to the Ex documentation.

4.6.5 Current input

INFORMATION!
Depending on the version, the current inputs must be connected passively or actively!
The I/O version and inputs/outputs installed in your signal converter are indicated on the sticker in the cover of the terminal compartment.

- All current inputs are electrically isolated from each other and from all other circuits.
- All operating data and functions can be adjusted.
- Passive mode:
  External power supply required: $V_{ext} \leq 32$ VDC
- Active mode:
  Use of the internal power supply: $V_{nom} = 24$ VDC
- For information on the adjustable operating states refer to *Function tables* on page 74.

INFORMATION!
For further information refer to Connection diagrams of inputs and outputs on page 43.

DANGER!
For devices used in hazardous areas, additional safety notes apply; please refer to the Ex documentation.

4.7 Electrical connection of the inputs and outputs

INFORMATION!
Assembly materials and tools are not part of the delivery. Use the assembly materials and tools in compliance with the applicable occupational health and safety directives.

4.7.1 Field housing, electrical connection of the inputs and outputs

DANGER!
All work on the electrical connections may only be carried out with the power disconnected. Take note of the voltage data on the nameplate!

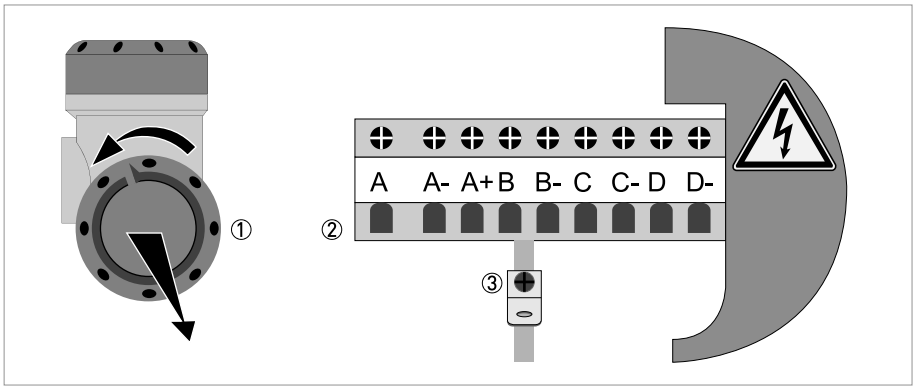

Figure 4-7: Terminal compartment for inputs and outputs

① Open the housing cover.
② Push the prepared cable through the cable entry and connect the necessary conductors.
③ Connect the shield if necessary.

- Close the cover of the terminal compartment.
- Close the housing cover.

INFORMATION!
Each time a housing cover is opened, the thread should be cleaned and greased.
Use only resin-free and acid-free grease.
Ensure that the housing gasket is properly fitted, clean and undamaged.

4.8 Connection diagrams of inputs and outputs

4.8.1 Important notes

INFORMATION!
Depending on the version, the inputs/outputs must be connected passively or actively or according to IEC 60947-5-6 (NAMUR)! The I/O version and inputs/outputs installed in your signal converter are indicated on the sticker in the cover of the terminal compartment.

- All groups are electrically isolated from each other and from all other input and output circuits.
- Passive mode: An external power supply is necessary to operate (activation) the subsequent devices (V_{ext}).
- Active mode: The signal converter supplies the power for operation (activation) of the subsequent devices, observe max. operating data.
- Terminals that are not used should not have any conductive connection to other electrically conductive parts.

DANGER!
For devices used in hazardous areas, additional safety notes apply; please refer to the Ex documentation.

I_a	I_p	Current output active or passive
P_a	P_p	Pulse/frequency output active or passive
P_N		Pulse/frequency output passive according to IEC 60947-5-6 (NAMUR)
S_a	S_p	Status output / limit switch active or passive
S_N		Status output / limit switch passive according to IEC 60947-5-6 (NAMUR)
C_a	C_p	Control input active or passive
C_N		Control input active according to IEC 60947-5-6 (NAMUR). Signal converter monitors cable breaks and short circuits according to IEC 60947-5-6. Errors indicated on LC display. Error messages possible via status output.
IIn_a	IIn_p	Current input active or passive

Table 4-2: Description of the used abbreviations

4.8.2 Description of the electrical symbols

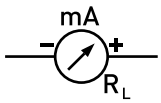	mA meter 0...20 mA or 4...20 mA and other R_L is the internal resistance of the measuring point including the cable resistance
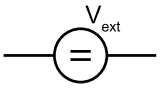	DC voltage source (V_{ext}), external power supply, any connection polarity
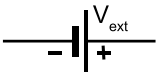	DC voltage source (V_{ext}), observe connection polarity according to connection diagrams
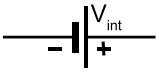	Internal DC voltage source
	Controlled internal current source in the device
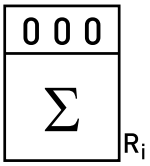	Electronic or electromagnetic counter At frequencies above 100 Hz, shielded cables must be used to connect the counters. R_i Internal resistance of the counter
	Button, N/O contact or similar

Table 4-3: Description of the electrical symbols

4.8.3 Basic inputs/outputs

CAUTION!
Observe connection polarity.

INFORMATION!
For further information refer to Description of the inputs and outputs on page 37 and refer to *HART connection on page 62.*

Current output active (HART®), basic I/Os

- $V_{int, nom}$ = 24 VDC nominal
- I ≤ 22 mA
- R_L ≤ 1 kΩ
- Don't connect the terminals A+ and A- directly to an external input. This will damage the external device!

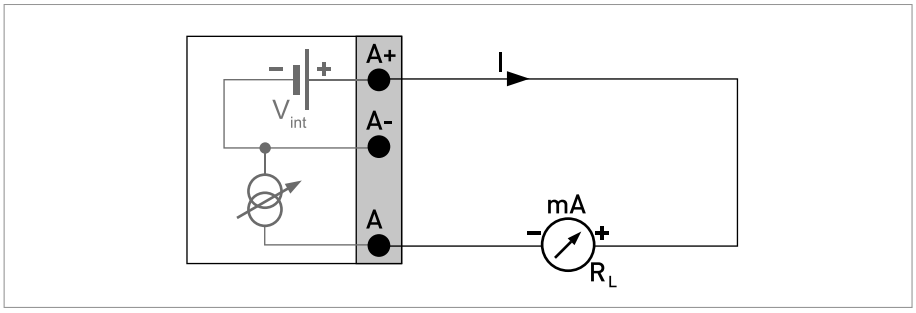

Figure 4-8: Current output active I_a

Current output passive (HART®), basic I/Os

- $V_{int, nom}$ = 24 VDC nominal
- V_{ext} ≤ 32 VDC
- I ≤ 22 mA
- V_0 ≥ 1.8 V
- R_L ≤ $(V_{ext} - V_0) / I_{max}$

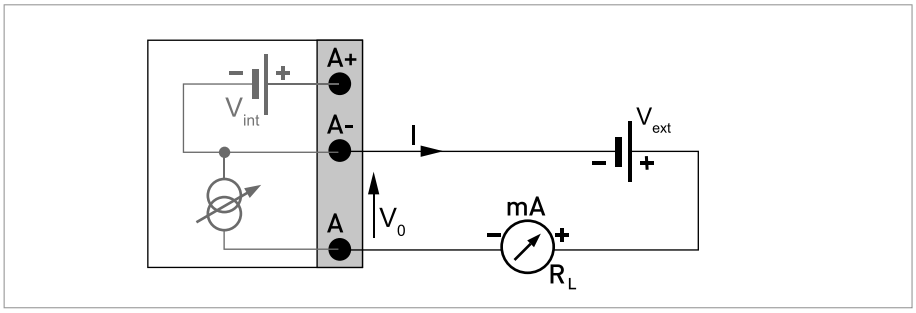

Figure 4-9: Current output passive I_p

INFORMATION!

- ***Compact and field housing versions:*** *Shield connected via the cable terminals in the terminal compartment.*

  Wall-mounted versions: *Shield connected using 6.3 mm / 0.25" push-on connectors in the terminal compartment.*
- *Any connection polarity.*

Pulse/frequency output passive, basic I/Os

- $V_{ext} \leq 32$ VDC
- f_{max} in operating menu set to $f_{max} \leq 100$ Hz:
  I ≤ 100 mA
  open:
  I ≤ 0.05 mA at V_{ext} = 32 VDC
  closed:
  $V_{0, max}$ = 0.2 V at I ≤ 10 mA
  $V_{0, max}$ = 2 V at I ≤ 100 mA
- f_{max} in the operating menu set to 100 Hz < $f_{max} \leq 10$ kHz:
  I ≤ 20 mA
  open:
  I ≤ 0.05 mA at V_{ext} = 32 VDC
  closed:
  $V_{0, max}$ = 1.5 V at I ≤ 1 mA
  $V_{0, max}$ = 2.5 V at I ≤ 10 mA
  $V_{0, max}$ = 5.0 V at I ≤ 20 mA
- If the following maximum load resistance $R_{L, max}$ is exceeded, the load resistance R_L must be reduced accordingly by parallel connection of R:
  f ≤ 100 Hz: $R_{L, max}$ = 47 kΩ
  f ≤ 1 kHz: $R_{L, max}$ = 10 kΩ
  f ≤ 10 kHz: $R_{L, max}$ = 1 kΩ
- The minimum load resistance $R_{L, min}$ is calculated as follows:
  $R_{L, min} = (V_{ext} - V_0) / I_{max}$
- Can also be set as status output; for the electrical connection refer to status output connection diagram.

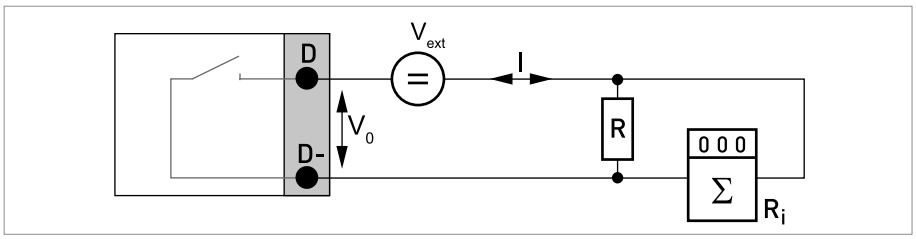

Figure 4-10: Pulse/frequency output passive P_p

INFORMATION!
- *Any connection polarity.*

Status output / limit switch passive, basic I/Os

- $V_{ext} \leq 32$ VDC
- $I \leq 100$ mA
- $R_{L, max} = 47$ kΩ
  $R_{L, min} = (V_{ext} - V_0) / I_{max}$
- open:
  $I \leq 0.05$ mA at $V_{ext} = 32$ VDC
  closed:
  $V_{0, max} = 0.2$ V at $I \leq 10$ mA
  $V_{0, max} = 2$ V at $I \leq 100$ mA
- The output is open when the device is de-energised.
- X stands for the terminals B, C or D. The functions of the connection terminals depend on the settings refer to *Function tables* on page 74.

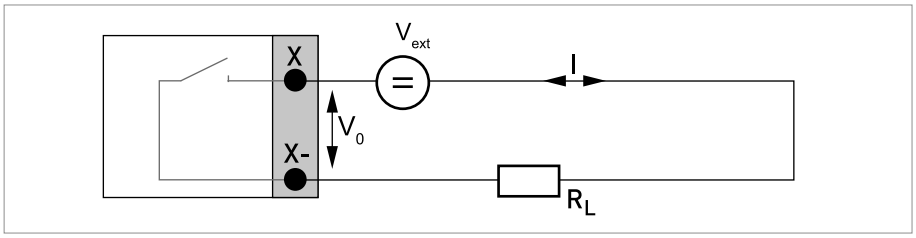

Figure 4-11: Status output / limit switch passive S_p

Control input passive, basic I/Os

- $8 V \leq V_{ext} \leq 32$ VDC
- $I_{max} = 6.5$ mA at $V_{ext} \leq 24$ VDC
  $I_{max} = 8.2$ mA at $V_{ext} \leq 32$ VDC
- Switching point for identifying "contact open or closed":
  Contact open (off): $V_0 \leq 2.5$ V at $I_{nom} = 0.4$ mA
  Contact closed (on): $V_0 \geq 8$ V at $I_{nom} = 2.8$ mA
- Can also be set as a status output; for the electrical connection refer to status output connection diagram.

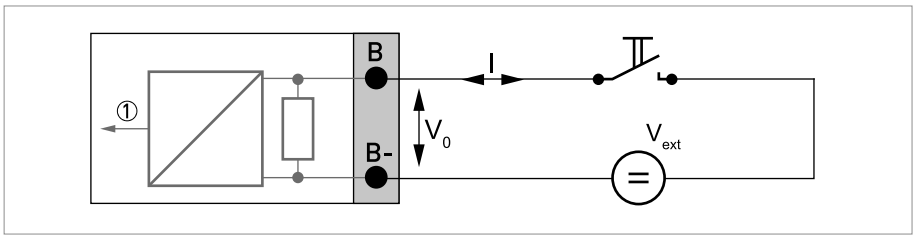

Figure 4-12: Control input passive C_p

① Signal

4.8.4 Modular inputs/outputs and bus systems

CAUTION!
Observe connection polarity.

INFORMATION!
- *For further information on electrical connection refer to Description of the inputs and outputs on page 37.*
- *For the electrical connection of bus systems, please refer to the supplementary documentation for the respective bus systems.*

Current output active (only current output terminals C/C- have HART® capability), modular I/Os

- $V_{int, nom}$ = 24 VDC
- I ≤ 22 mA
- R_L ≤ 1 kΩ
- X designates the connection terminals A, B or C, depending on the version of the signal converter.

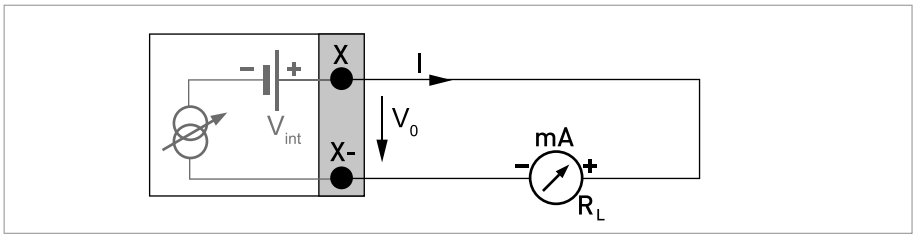

Figure 4-13: Current output active I_a

Current output passive (only current output terminals C/C- have HART® capability), modular I/Os

- V_{ext} ≤ 32 VDC
- I ≤ 22 mA
- V_0 ≥ 1.8 V
- $R_{L, max} = (V_{ext} - V_0) / I_{max}$
- X designates the connection terminals A, B or C, depending on the version of the signal converter.

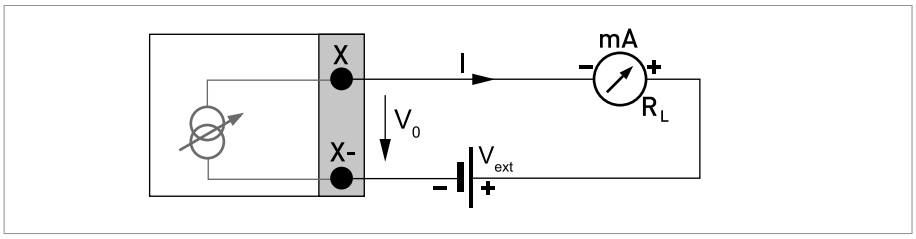

Figure 4-14: Current output passive I_p

INFORMATION!

- ***Compact and field housing versions:*** *Shield connected via the cable terminals in the terminal compartment.*

  Wall-mounted versions: *Shield connected using 6.3 mm / 0.25" push-on connectors in the terminal compartment.*
- *Observe connection polarity.*

Pulse/frequency output active, modular I/Os

- V_{nom} = 24 VDC
- f_{max} in the operating menu set to $f_{max} \leq$ 100 Hz:
  I ≤ 20 mA
  open:
  I ≤ 0.05 mA
  closed:
  $V_{0,\ nom}$ = 24 V at I = 20 mA
- f_{max} in operating menu set to 100 Hz < $f_{max} \leq$ 10 kHz:
  I ≤ 20 mA
  open:
  I ≤ 0.05 mA
  closed:
  $V_{0,\ nom}$ = 22.5 V at I = 1 mA
  $V_{0,\ nom}$ = 21.5 V at I = 10 mA
  $V_{0,\ nom}$ = 19 V at I = 20 mA
- If the following maximum load impedance $R_{L,\ max}$ is exceeded, the load impedance R_L must be reduced accordingly by parallel connection of R:
  f ≤ 100 Hz: $R_{L,\ max}$ = 47 kΩ
  f ≤ 1 kHz: $R_{L,\ max}$ = 10 kΩ
  f ≤ 10 kHz: $R_{L,\ max}$ = 1 kΩ
- The minimum load impedance $R_{L,\ min}$ is calculated as follows:
  $R_{L,\ min} = V_0 / I_{max}$
- X designates the connection terminals A, B or D, depending on the version of the signal converter.

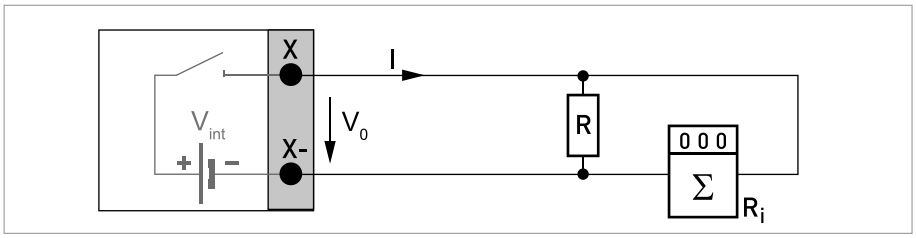

Figure 4-15: Pulse/frequency output active P_a

Pulse/frequency output passive, modular I/Os

- $V_{ext} \leq 32$ VDC
- f_{max} in the operating menu set to $f_{max} \leq 100$ Hz:
  I ≤ 100 mA
  open:
  I ≤ 0.05 mA at V_{ext} = 32 VDC
  closed:
  $V_{0, max}$ = 0.2 V at I ≤ 10 mA
  $V_{0, max}$ = 2 V at I ≤ 100 mA
- f_{max} in operating menu set to 100 Hz < $f_{max} \leq 10$ kHz:
  open:
  I ≤ 0.05 mA at V_{ext} = 32 VDC
  closed:
  $V_{0, max}$ = 1.5 V at I ≤ 1 mA
  $V_{0, max}$ = 2.5 V at I ≤ 10 mA
  $V_{0, max}$ = 5 V at I ≤ 20 mA
- If the following maximum load impedance $R_{L, max}$ is exceeded, the load impedance R_L must be reduced accordingly by parallel connection of R:
  f ≤ 100 Hz: $R_{L, max}$ = 47 kΩ
  f ≤ 1 kHz: $R_{L, max}$ = 10 kΩ
  f ≤ 10 kHz: $R_{L, max}$ = 1 kΩ
- The minimum load impedance $R_{L, min}$ is calculated as follows:
  $R_{L, min} = (V_{ext} - V_0) / I_{max}$
- Can also be set as status output; for the electrical connection refer to status output connection diagram.
- X designates the connection terminals A, B or D, depending on the version of the signal converter.

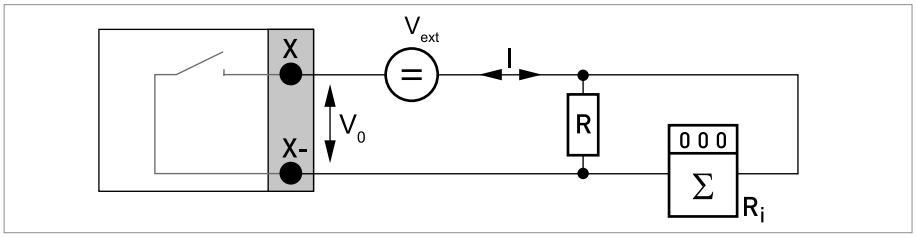

Figure 4-16: Pulse/frequency output passive P_p

INFORMATION!

- ***Compact and field housing versions:*** *Shield connected via the cable terminals in the terminal compartment.*

  Wall-mounted versions: *Shield connected using 6.3 mm / 0.25" push-on connectors in the terminal compartment.*
- *Any connection polarity.*

Pulse/frequency output passive P_N NAMUR, modular I/O

- Connection according to IEC 60947-5-6.
- open:
  I_{nom} = 0.6 mA
  closed:
  I_{nom} = 3.8 mA
- X designates the connection terminals A, B or D, depending on the version of the signal converter.

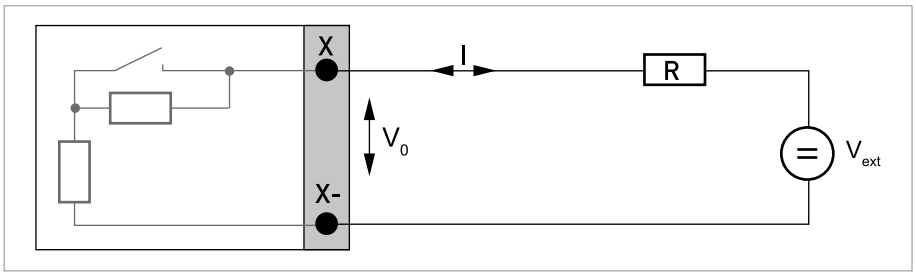

Figure 4-17: Pulse/frequency output passive P_N according to IEC 60947-5-6 (NAMUR)

Status output / limit switch active, modular I/Os

- Observe connection polarity.
- V_{int} = 24 VDC
- I ≤ 20 mA
- R_L ≤ 47 kΩ
- open:
  I ≤ 0.05 mA
  closed:
  $V_{0, nom}$ = 24 V at I = 20 mA
- X designates the connection terminals A, B or D, depending on the version of the signal converter.

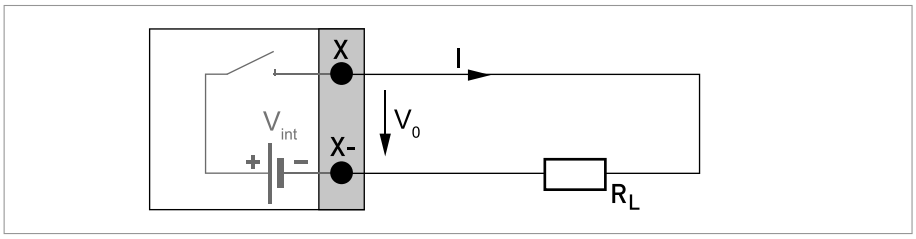

Figure 4-18: Status output / limit switch active S_a

Status output / limit switch passive, modular I/Os

- Any connection polarity.
- V_{ext} = 32 VDC
- I ≤ 100 mA
- $R_{L, max}$ = 47 kΩ
  $R_{L, min} = (V_{ext} - V_0) / I_{max}$
- open:
  I ≤ 0.05 mA at V_{ext} = 32 VDC
  closed:
  $V_{0, max}$ = 0.2 V at I ≤ 10 mA
  $V_{0, max}$ = 2 V at I ≤ 100 mA
- The output is open when the device is de-energised.
- X designates the connection terminals A, B or D, depending on the version of the signal converter.

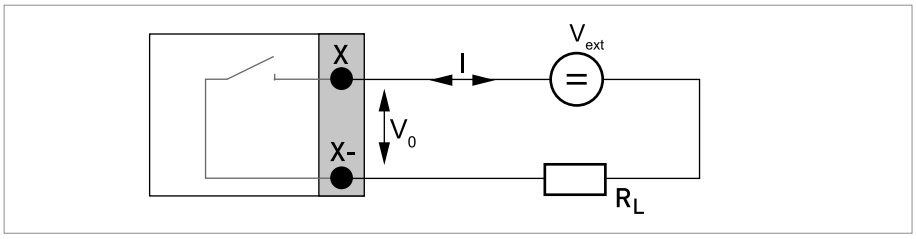

Figure 4-19: Status output / limit switch passive S_p

Status output / limit switch S_N NAMUR, modular I/Os

- Any connection polarity.
- Connection according to IEC 60947-5-6.
- open:
  I_{nom} = 0.6 mA
  closed:
  I_{nom} = 3.8 mA
- The output is open when the device is de-energised.
- X designates the connection terminals A, B or D, depending on the version of the signal converter.

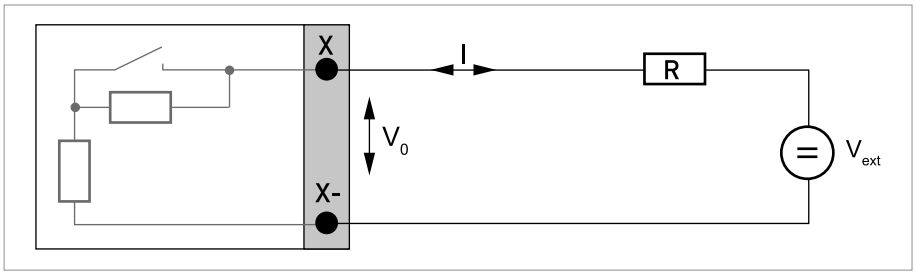

Figure 4-20: Status output / limit switch S_N according to IEC 60947-5-6 (NAMUR)

CAUTION!
Observe connection polarity.

Control input active, modular I/Os

- V_{int} = 24 VDC
- External contact open:
  $V_{0, nom}$ = 22 V
  External contact closed:
  I_{nom} = 4 mA
- Switching point for identifying "contact open or closed":
  Contact closed (on): $V_0 \leq$ 10 V at I_{nom} = 1.9 mA
  Contact open (off): $V_0 \geq$ 12 V at I_{nom} = 1.9 mA
- X designates the connection terminals A or B, depending on the version of the signal converter.

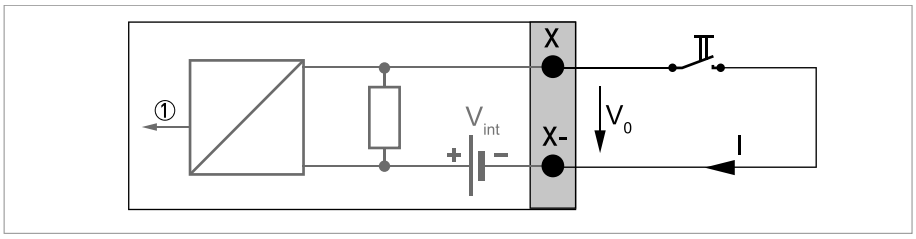

Figure 4-21: Control input active C_a

① Signal

Control input passive, modular I/Os

- 3 V $\leq V_{ext} \leq$ 32 VDC
- I_{max} = 9.5 mA at $V_{ext} \leq$ 24 V
  I_{max} = 9.5 mA at $V_{ext} \leq$ 32 V
- Switching point for identifying "contact open or closed":
  Contact open (off): $V_0 \leq$ 2.5 V at I_{nom} = 1.9 mA
  Contact closed (on): $V_0 \geq$ 3 V at I_{nom} = 1.9 mA
- X designates the connection terminals A or B, depending on the version of the signal converter.

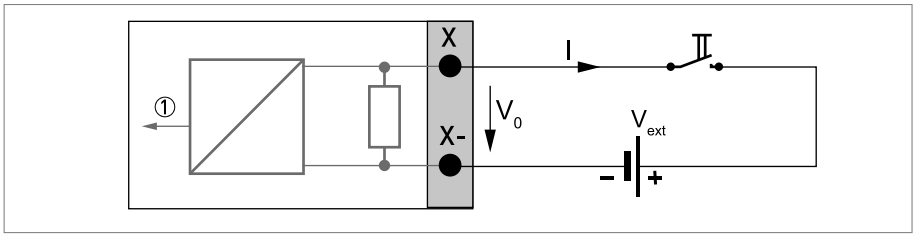

Figure 4-22: Control input passive C_p

① Signal

CAUTION!
Observe connection polarity.

Control input active C_N NAMUR, modular I/Os

- Connection according to IEC 60947-5-6.
- Switching point for identifying "contact open or closed":
  Contact open (off): $V_{0,\ nom}$ = 6.3 V at I_{nom} < 1.9 mA
  Contact closed (on): $V_{0,\ nom}$ = 6.3 V at I_{nom} > 1.9 mA
- Detection of cable break:
  $V_0 \geq$ 8.1 V at I $\leq$ 0.1 mA
- Detection of cable short circuit:
  $V_0 \leq$ 1.2 V at I $\geq$ 6.7 mA
- X designates the connection terminals A or B, depending on the version of the signal converter.

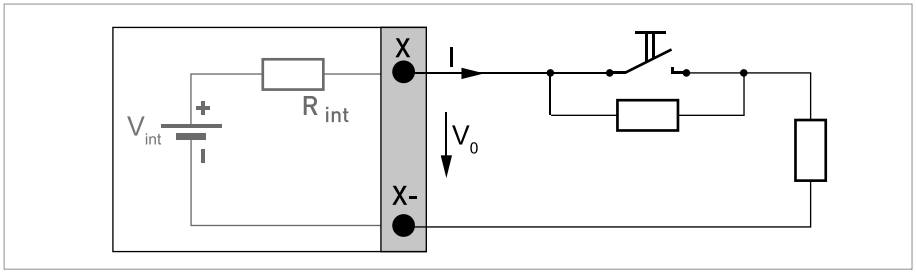

Figure 4-23: Control input active C_N according to IEC 60947-5-6 (NAMUR)

Current input active, modular I/Os

- $V_{int, nom}$ = 24 VDC
- I ≤ 22 mA
- I_{max} ≤ 26 mA (electronically limited)
- $V_{0, min}$ = 19 V at I ≤ 22 mA
- **no** HART®
- X designates the connection terminals A or B, depending on the version of the signal converter.

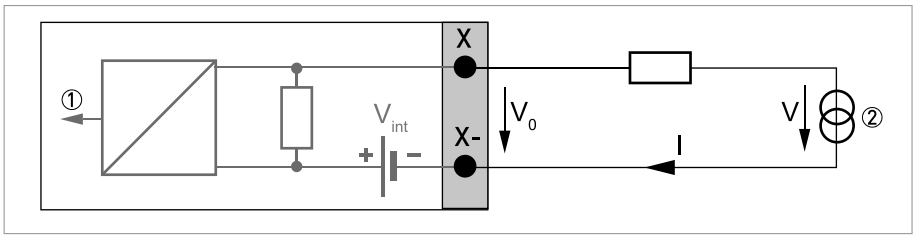

Figure 4-24: Current input active IIn_a

① Signal
② 2-wire transmitter (e.g. temperature)

Current input passive, modular I/Os

- V_{ext} ≤ 32 VDC
- I ≤ 22 mA
- I_{max} ≤ 26 mA
- $V_{0, max}$ = 5 V at I ≤ 22 mA
- X designates the connection terminals A or B, depending on the version of the signal converter.

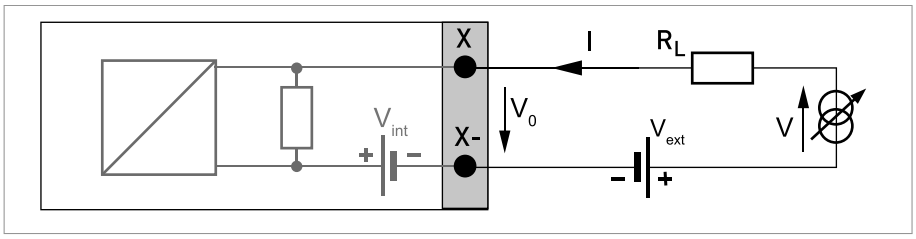

Figure 4-25: Current input passive IIn_p

① Signal
② 2-wire transmitter (e.g. temperature)

4.8.5 Ex i inputs/outputs

DANGER!
For devices used in hazardous areas, additional safety notes apply; please refer to the Ex documentation.

INFORMATION!
For further information on electrical connection refer to Description of the inputs and outputs on page 37.

Current output active (only current output terminals C/C- have HART® capability), Ex i I/Os

- Observe connection polarity.
- $V_{int, nom}$ = 20 VDC
- I ≤ 22 mA
- R_L ≤ 450 Ω
- X designates the connection terminals A or C, depending on the version of the signal converter.

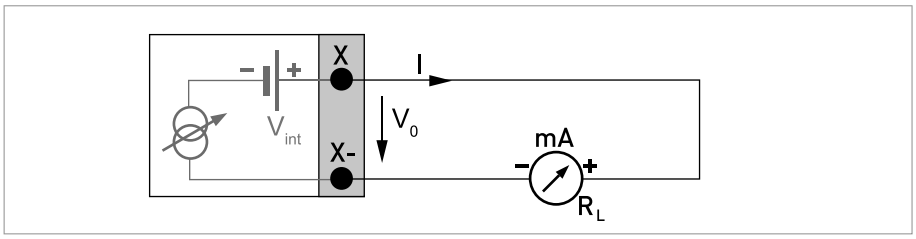

Figure 4-26: Current output active I_a Ex i

Current output passive (only current output terminals C/C- have HART® capability), Ex i I/Os

- Any connection polarity.
- V_{ext} ≤ 32 VDC
- I ≤ 22 mA
- V_0 ≥ 4 V
- $R_{L, max} = (V_{ext} - V_0) / I_{max}$
- X designates the connection terminals A or C, depending on the version of the signal converter.

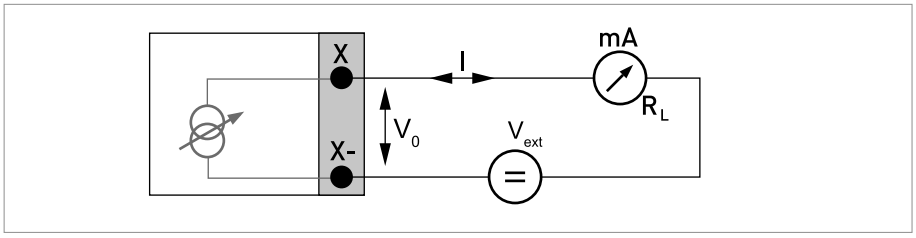

Figure 4-27: Current output passive I_p Ex i

DANGER!
For devices used in hazardous areas, additional safety notes apply; please refer to the Ex documentation.

INFORMATION!
- *For frequencies above 100 Hz, shielded cables are to be used in order to reduce effects from electrical interferences (EMC).*
- ***Compact and field housing versions:*** *Shield connected via the cable terminals in the terminal compartment.*

  Wall-mounted versions: *Shield connected using 6.3 mm / 0.25" push-on connectors in the terminal compartment.*
- *Any connection polarity.*

Pulse/frequency output passive P_N NAMUR, Ex i I/Os

- Connection according to IEC 60947-5-6.
- open:
  I_{nom} = 0.43 mA
  closed:
  I_{nom} = 4.5 mA
- X designates the connection terminals B or D, depending on the version of the signal converter.

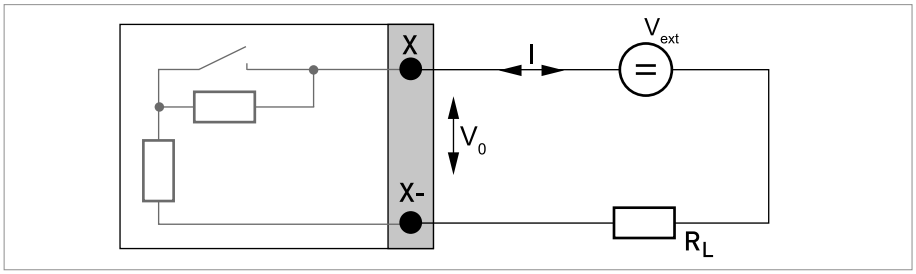

Figure 4-28: Pulse/frequency output passive P_N according to IEC 60947-5-6 (NAMUR) Ex i

INFORMATION!
- *Any connection polarity.*

Status output / limit switch S_N NAMUR, Ex i I/Os

- Connection according to IEC 60947-5-6.
- open:
  I_{nom} = 0.43 mA
  closed:
  I_{nom} = 4.5 mA
- The output is closed when the device is de-energised.
- X designates the connection terminals B or D, depending on the version of the signal converter.

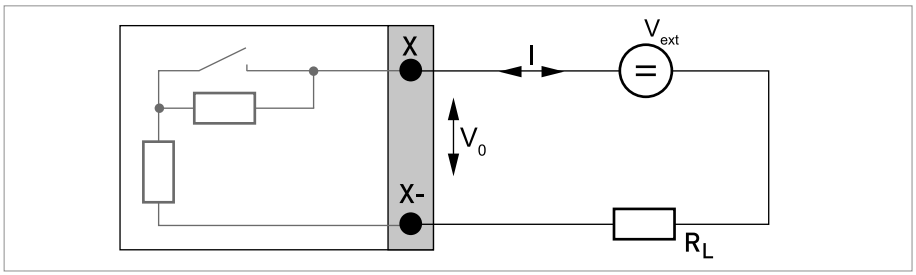

Figure 4-29: Status output / limit switch S_N according to IEC 60947-5-6 (NAMUR) Ex i

DANGER!
For devices used in hazardous areas, additional safety notes apply; please refer to the Ex documentation.

INFORMATION!
- *Any connection polarity.*

Control input passive, Ex i I/Os

- 5.5 V ≤ V_{ext} ≤ 32 VDC
- I_{max} = 6 mA at V_{ext} ≤ 24 V
  I_{max} = 6.5 mA at V_{ext} ≤ 32 V
- Switching point for identifying "contact open or closed":
  Contact open (off): V_0 ≤ 3.5 V at I ≤ 0.5 mA
  Contact closed (on): V_0 ≥ 5.5 V at I ≥ 4 mA
- X designates the connection terminals B, if available.

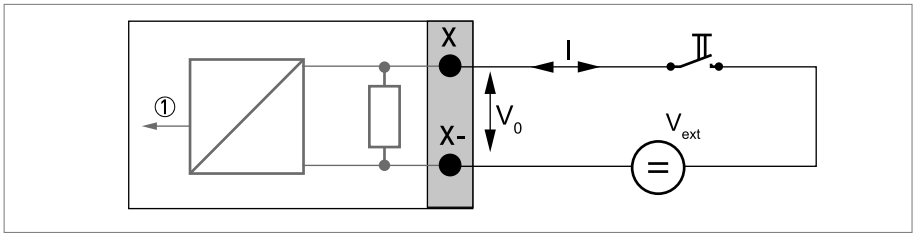

Figure 4-30: Control input passive C_p Ex i

① Signal

Current input active, Ex i I/Os

- $V_{int, nom}$ = 20 VDC
- I ≤ 22 mA
- $V_{0, min}$ = 14 V at I ≤ 22 mA
- In the event of a short circuit, the voltage is cut off.
- X designates the connection terminals A or B, depending on the version of the signal converter.

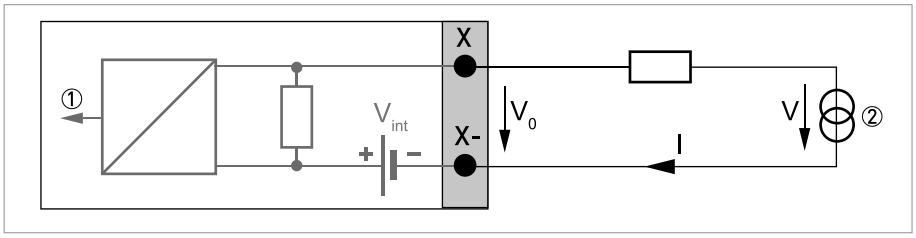

Figure 4-31: Current input active IIn_a

① Signal
② 2-wire transmitter (e.g. temperature)

Current input passive, Ex i I/Os

- V_{ext} ≤ 32 VDC
- I ≤ 22 mA
- $V_{0, max}$ = 4 V at I ≤ 22 mA
- X designates the connection terminals A or B, depending on the version of the signal converter.

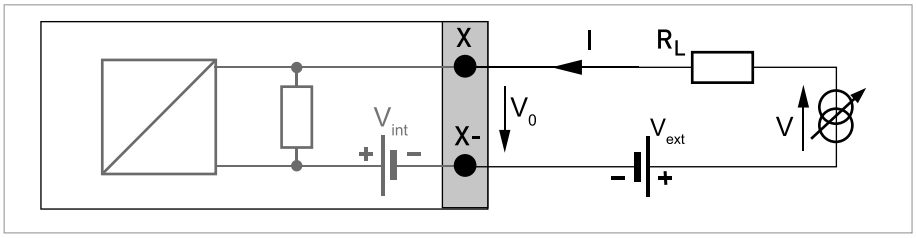

Figure 4-32: Current input passive IIn_p

① Signal
② 2-wire transmitter (e.g. temperature)

4.8.6 HART connection

INFORMATION!

- *In the basic I/O the current output at connection terminals A+/A-/A always has HART® capability.*
- *For modular I/O and Ex i I/O, only the output module for the connection terminals C/C- has HART® capability.*

HART® connection active (point-to-point)

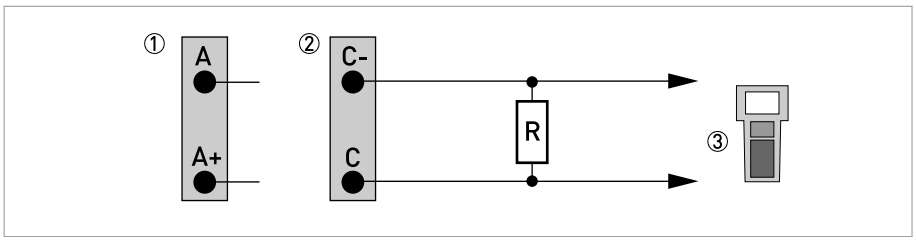

Figure 4-33: HART® connection active (I_a)

① Basic I/O: terminals A and A+
② Modular I/O: terminals C- and C
③ HART® communicator

The parallel resistance to the HART® communicator must be R ≥ 230 Ω.

HART® connection passive (Multi-Drop mode)

- I: $I_{0\%}$ ≥ 4 mA
- Multi-Drop mode I: I_{fix} ≥ 4 mA = $I_{0\%}$
- V_{ext} ≤ 32 VDC
- R ≥ 230 Ω

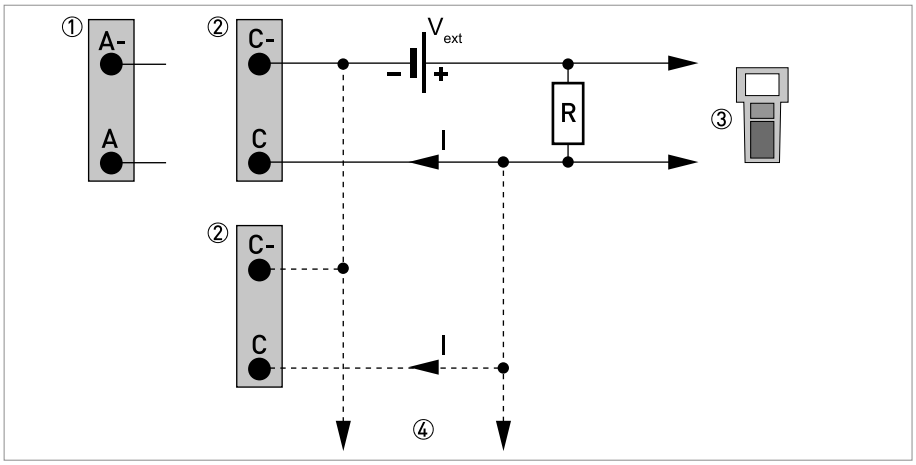

Figure 4-34: HART® connection passive (I_p)

① Basic I/O: terminals A- and A
② Modular I/O: terminals C- and C
③ HART® communicator
④ Other devices with HART® capability

5.1 Switching on the power

Before connecting to power, please check that the system has been correctly installed. This includes:

- The device must be mounted in compliance with the regulations.
- The power connections must have been made in compliance with the regulations.
- The electrical terminal compartments must be secured and the covers have been screwed on.
- Check that the electrical operating data of the power supply are correct.

- Switching on the power.

5.2 Starting the signal converter

The measuring device, consisting of the flow sensor and the signal converter, is supplied ready for operation. All operating data have been set at the factory in accordance with your order specifications.

When the power is switched on, a self test is carried out. After that the device immediately begins measuring, and the current values are displayed.

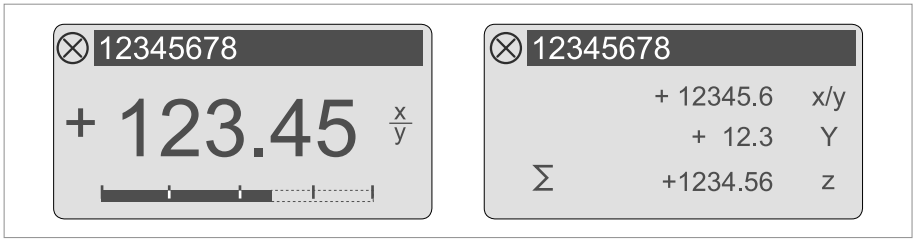

Figure 5-1: Displays in measuring mode (examples for 2 or 3 measured values)
x, y and z denote the units of the measured values displayed

It is possible to change between the two measured value windows, the trend display and the list with the status messages by pressing the keys ↑ and ↓ .

6.1 Display and operating elements

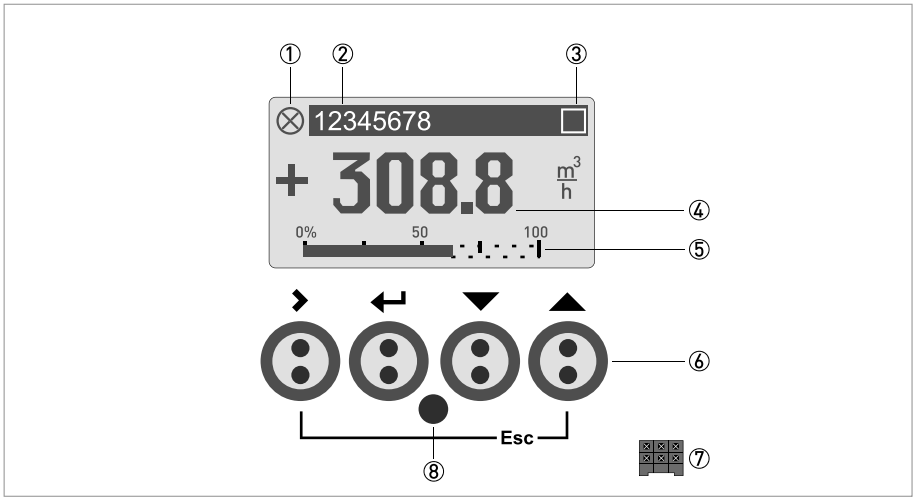

Figure 6-1: Display and operating elements (Example: flow indication with 2 measuring values)

① Indicates a possible status message in the status list (see table below for status icons)
② Tag number (is only indicated if this number was entered previously by the operator)
③ Indicates when a key has been pressed
④ First measured variable in large representation
⑤ Bargraph indication
⑥ Operating keys (refer to table below for function and representation in text)
⑦ Interface to the GDC bus (not present in all signal converter versions)
⑧ Infrared sensor (not present in all signal converter versions)

CAUTION!
The use of a jumper is only permitted for custody transfer devices to lock the access to custody transfer relevant parameters. For non custody transfer devices (i.e. process instruments) this jumper must not be used!

INFORMATION!
- *The switching point for the 4 optical keys is located directly in front of the glass.*
  It is recommended to activate the keys at right angles to the front. Touching them from the side can cause incorrect operation.
- *After 5 minutes of inactivity, there is an automatic return to the measuring mode.*
  Previously changed data is not saved.

The device user interface provides several display modes. In measuring mode the following display pages are available:

Display page in measuring mode	Screen
1st measuring page	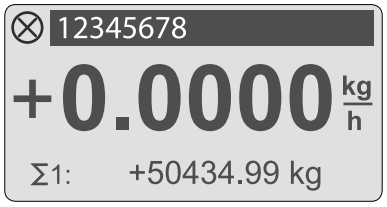
2nd measuring page	
Graphic page	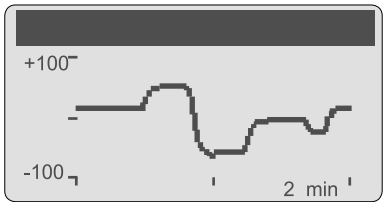
Status page	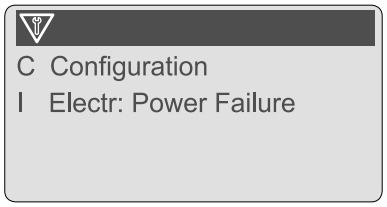

Table 6-1: Indication of display pages

The following display modes are available:

Display modes and functionality	> key	↵ key	↓ or ↑ key	Esc (> + ↑) key
Measuring mode Display of measurement values	Press key for 2.5 s At measuring pages or graphic page enters device menu for configuration. At status page enters menu for status messages and details	Reset display	Switch between display pages: 1st and 2nd measuring page, graphic page and status page	-
Menu mode Navigation through device menu or active status messages	Access to displayed menu, then 1st submenu is displayed	Either return to menu level above or to measuring mode but prompt whether the data should be saved	Select menu item	-
Parameter and data mode Changing parameter values or starting function	For numerical values, move cursor (highlighted in **black**) one position to the right	Return to menu mode	Use cursor (highlighted in **black**) to change number, unit, property and to move the decimal point	Return to menu mode without acceptance of data

Table 6-2: Description of display modes and operating keys

The following status levels with the related symbols are available:

Symbol	Symbol background colour	Letter	Status signal	Description and consequence
	white	**F** (bold)	Error in device	No measurement possible.
	blue	F	Application error	No measurement possible due to process/application conditions. The device is still OK.
	blue	S	Out of specification	Measurements are available but are no longer sufficiently accurate and should be checked.
	blue	M	Maintenance required	Measurements are still accurate but this could soon change
	blue	C	Checks in progress	A test function is active. The displayed or transferred measured value does not correspond to the actual measured value.
-	-	I	Information	No direct influence on the measurements.
-	-	-	No message	-

Table 6-3: Description of the icons for the status level

For further information refer to *Error messages* on page 94.

6.1.1 Display in measuring mode with 2 or 3 measured values

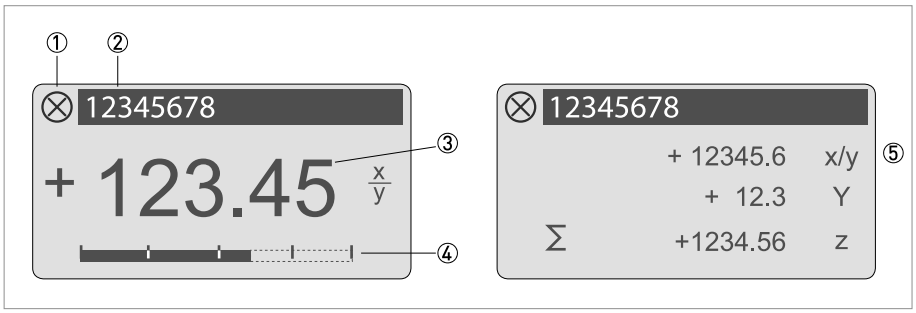

Figure 6-2: Example for display in measuring mode with 2 or 3 measured values

① Indicates a possible status message in the status list
② Tag number (is only indicated if this number was entered previously by the operator)
③ 1st measured variable in large representation
④ Bargraph indication
⑤ Depiction with 3 measured values

6.1.2 Display for selection of submenu and functions, 3 lines

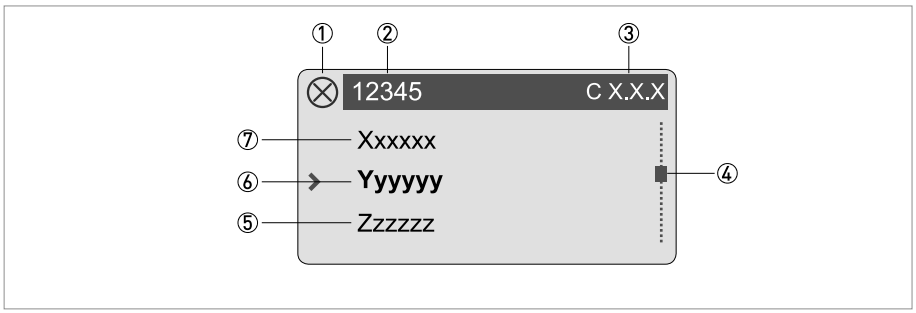

Figure 6-3: Display for selection of submenu and functions, 3 lines

① Indicates a possible status message in the status list
② Menu, submenu or function name
③ Number relating to ⑥
④ Indicates position within menu, submenu or function list
⑤ Next menu(s), submenu or function
(_ _ _ signalise in this line the end of the list)
⑥ Current menu(s), submenu or function
⑦ Previous menu(s), submenu or function
(_ _ _ signalise in this line the beginning of the list)

6.1.3 Display when setting parameters, 4 lines

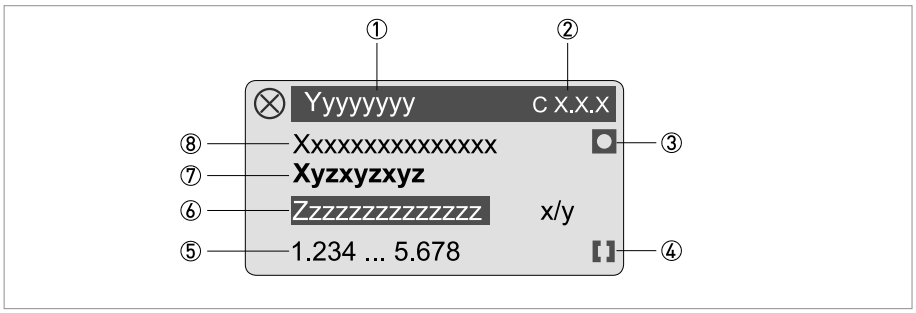

Figure 6-4: Display when setting parameters, 4 lines

① Current menu(s), submenu or function
② Number relating to ⑦
③ Denotes factory setting
④ Denotes permissible value range
⑤ Permissible value range for numeric values
⑥ Currently set value, unit or function (when selected, appears with white text, blue background) This is where the data is changed.
⑦ Current parameter
⑧ Factory setting of parameter

6.1.4 Display when previewing parameters, 4 lines

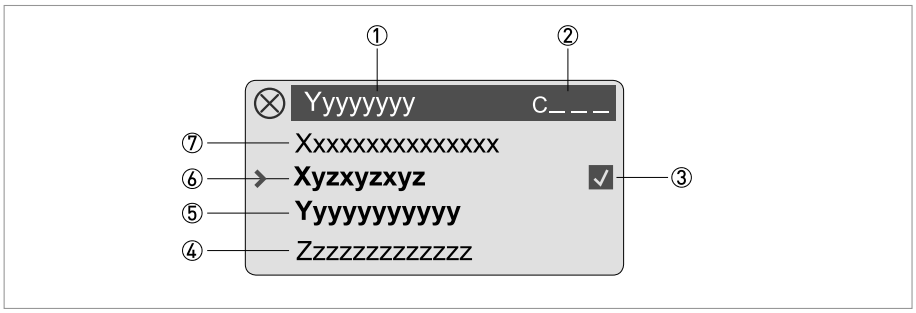

Figure 6-5: Display when previewing parameters, 4 lines

① Current menu(s), submenu or function
② Number relating to ⑥
③ Denotes a changed parameter (simple check of changed data when browsing through lists)
④ Next parameter
⑤ Currently set data from ⑥
⑥ Current parameter (for selection press key >; then see previous chapter)
⑦ Factory setting of parameter

6.1.5 Using an IR interface (option)

The optical IR interface serves as an adapter for PC-based communication with the signal converter without opening the housing.

INFORMATION!

- *This device is not part of the scope of delivery.*
- *For more information about activation with the functions A4 or C5.6.6.*

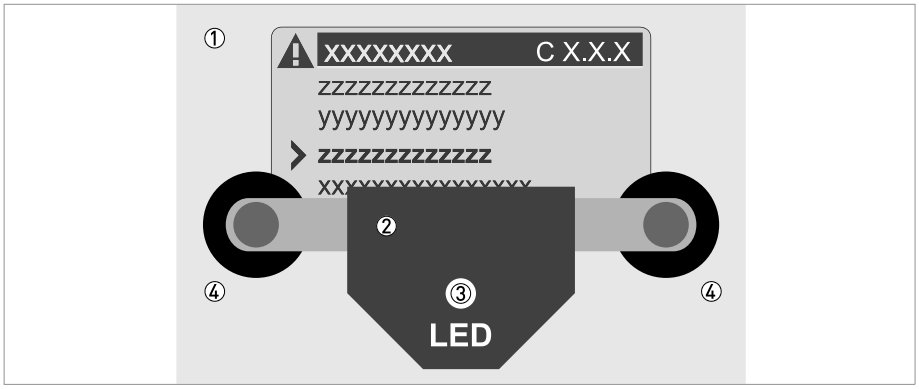

Figure 6-6: IR interface

① Glass panel in front of the control and display panel
② IR interface
③ LED lights up when IR interface is activated.
④ Suction cups

Timeout function

Following activation of the IR interface in A4 or C5.6.6 the interface must be properly positioned and attached to the housing with the suction cups within 60 seconds. If this does not happen within the specified time period, the device can be operated using the optical keys again. Upon activation, the LED ③ lights up and the optical keys no longer function.

6.2 Menu overview

Measuring mode		Select menu		Select menu and/or sub-menu				Select function and set data
↲	Press > 2.5 s							
	A quick setup		> ↲	A1 language			> ↲	
				A2 tag				
				A3 reset	> ↲	A3.1 reset errors		
						A3.2 counter 1		
						A3.3 counter 2		
						A3.4 counter 3		
				A4 GDC IR interface				
	↓ ↑			↓ ↑		↓ ↑		↓ ↑ >

Measuring mode	Select menu		Select menu and/or sub-menu				Select function and set data
↵	Press > 2.5 s						
	B test	> ↵	B1 simulation	> ↵	B1.1 volume flow	> ↵	
					B1.2 velocity of sound		
					B1._ current in X		
					B1._ current out X		
					B1._ pulse out X		
					B1._ frequency output X		
					B1._ control input X		
					B1._ limit switch X		
					B1._ status output X		
			B2 actual values	> ↵	B2.1 act. volume flow		
					B2.2 act. corrected flow		
					B2.4 act. mass flow		
					B2.5 act. molar mass		
					B2.7 act. meth. fraction		
					B2.9 act. flow speed		
					B2.10 act. vel. of sound		
					B2.11 act. gain		
					B2.12 act. SNR		
					B2.13 act. pressure		
					B2.14 act. temperature		
					B2.15 current in A		
					B2.16 current in B		
					B2.17 operating hours		
			B3 information	> ↵	B3.1 C number		
					B3.2 process input		
					B3.3 SW.REV.MS		
					B3.4 SW.REV.UIS		
					B3.6 Electronic Revision ER		
	↓ ↑		↓ ↑		↓ ↑		↓ ↑ >

Measuring mode	Select menu		Select menu and/or sub-menu				Select function and set data
↵	Press > 2.5 s						
	C setup	> ↵	C1 process input	> ↵	C1.1 meter size	> ↵	
					C1.2 calibration		
					C1.3 filter		
					C1.4 plausibility		
					C1.5 simulation		
					C1.6 information		
					C1.9 linearization		
					C1.10 adiabatic index		
					C1.11 P & T correction		
					C1.12 P & T inputs		
					C1.13 pipe temperature		
					C1.14 pipe pressure		
					C1.15 standard density		
					C1.16 methane fraction		
					C1.17 saturated gas cor.		
					C1.18 diagnosis value		
			C2 I/O (input/output)	> ↵	C2.1 hardware		
					C2._ current input X		
					C2._ current output X		
					C2._ frequency output X		
					C2._ pulse output X		
					C2._ status output X		
					C2._ limit switch X		
					C2._ control input X		
			C3 I/O counter	> ↵	C3.1 counter 1		
					C3.2 counter 2		
					C3.3 counter 3		
	↓ ↑		↓ ↑		↓ ↑		↓ ↑ >

Measuring mode	Select menu		Select menu and/or sub-menu				Select function and set data
↵	Press > 2.5 s						
	C setup	> ↵	C4 I/O HART	> ↵	C4.1 PV is	> ↵	
					C4.2 SV is		
					C4.3 TV is		
					C4.4 4V is		
					C4.5 HART units		
			C5 device	> ↵	C5.1 device info		
					C5.2 display		
					C5.3.1. meas. page		
					C5.4.2. meas. page		
					C5.5 graphic page		
					C5.6 special functions		
					C5.7 units		
					C5.8 HART		
					C5.9 quick setup		
	↓ ↑		↓ ↑		↓ ↑		↓ ↑ >

6.3 Function tables

INFORMATION!

- *The following tables describe the functions of the standard device with HART® connection. The functions for Modbus, Foundation Fieldbus and Profibus are described in detail in the corresponding supplementary instructions.*
- *Depending on the device version, not all functions are available.*

6.3.1 Menu A; quick setup

Function	Setting / Description
A1 language	Language selection depends on the device version.
A2 tag	Measuring point identifier (Tag no.) appears in the LC display header (up to 8 digits).
A3 reset	
A3.1 reset errors	Query: reset errors? Select: no / yes
A3.2 counter 1	Query: reset counter? Select: no / yes (available if activated in C5.9.1)
A3.3 counter 2	Query: reset counter? Select: no / yes (available if activated in C5.9.2)
A3.4 counter 3	Query: reset counter? Select: no / yes (available if activated in C5.9.3)
A4 GDC IR interface	After this function has been activated an optical GDC adapter can be connected to the LC display. If approximately 60 seconds pass without a connection being established or after the adapter is removed, then the function is exited and the optical keys are active once again.
	Select: break (exit function without connection) / activate (the IR interface (adapter) and interrupt the optical keys)

6.3.2 Menu B; test

Function	Setting / Description

B1 simulation

B1 simulation	The displayed values are simulated.
B1.1 volume flow	Simulation of volume flow.
	Select: cancel (exit function without simulation) / set value (unit selection in C5.7.2)
	Query: start simulation? Select: no (exit function without simulation) / yes (start simulation)
B1.2 velocity of sound	Simulation of velocity of sound, sequence and settings similar to B1.1, see above!
B1._ current in X	_ stands for B1.3...1.6. Simulation X X stands for one of the connection terminals A, B, C or D. Sequence and settings similar to B1.1, see above! For the pulse output the set number of pulses are displayed once in a second.
B1._ current out X	
B1._ pulse out X	
B1._ frequency output X	
B1._ control input X	
B1._ limit switch X	
B1._ status output X	

Function	Setting / Description

B2 actual values

B2 actual values	Display the actual values. Exit the displayed function with the ↵ key.
B2.1 act. volume flow	Display the actual values.
B2.2 act. corrected flow	Display the actual corrected flow.
B2.4 act. mass flow	Display the actual mass flow.
B2.5 act. molar mass	Display the actual molar mass.
B2.7 act. meth. fraction	Display the actual methane fraction
B2.9 act. flow speed	Display the actual flow speed.
B2.10 act. vel. of sound	Display the actual velocity of sound. Select: path 1 / path 2
B2.11 act. gain	Display the actual gain. Select: path 1 / path 2
B2.12 act. SNR	Display the actual SNR. Select: path 1 / path 2
B2.13 act. pressure	Display the actual pressure.
B2.14 act. temperature	Display the actual temperature.
B2.15 current in A	Display the actual values of the current input at terminal A.
B2.16 current in B	Display the actual values of the current input at terminal B.
B2.17 operating hours	Display the actual operating hours.

B3 information

B3 information	LC display (this format description is only valid for B3.2....3.5) 1st line: ID number of the circuit board 2nd line: software version 3rd line: production date
B3.1 C number	CG number, cannot be changed (input/output version).
B3.2 process input	Process input part of the electronics.
	Select: sensor CPU / sensor DSP / sensor driver
B3.3 SW.REV.MS	Information about the main software.
B3.4 SW.REV.UIS	Information about the user interface software of the measuring device.
B3.5 "bus interface"	Only appears with Modbus and FF and shows the information about the corresponding interface software.
B3.6 Electronic Revision ER	Reference identification number, electronic revision and production date of the device; includes all hardware and software changes

6.3.3 Menu C; setup

Function	Setting / Description
C1 process input	
C1.1 meter size	Select from size table.
	Range: DN50...1000 / 1...40"
C1.2 calibration	Grouping of all functions related to flow sensor calibration.
C1.2.1 zero calibration	Display of current zero calibration value.
	Query: calibrate zero? Select: cancel (return with ↵ key) / automatic (shows the current value as the new zero calibration value) / default
C1.2.2 GK	Set value according to the information on the nameplate. Range: 0.5000...10.000
C1.3 filter	
C1.3.1 limitation	Limitation of all flow values, before smoothing by time constant; affects all outputs. Range: -100.0....+100.0 m/s
C1.3.2 flow direction	Define the polarity of the flow direction.
	Select: normal direction (according to the arrow on the flow sensor) / reverse direction (in the opposite direction to the arrow)
C1.3.3 time constant	Averages measurement
	Increasing value improves stability but delays the reaction.
	Master setting, overrules time constant settings of all outputs.
	xxx.x s; range: 0.0...100 s
C1.3.4 low flow cutoff	Sets low flow values to "0"; affects all outputs.
	x.xxx ± x.xxx m/s; range: 0.0...10 m/s
	(1st value = switching point / 2nd value = hysteresis), condition: 2nd value ≤ 1st value
C1.4 plausibility	Changes in values outside error limit are only accepted when number of measurements exceeds counter limit (C1.4.3).
C1.4.1 error limit	Measurement is ignored if value exceeds the error limit. One ignored value = counter +1. Measurements within the error limit decrease the counter (C1.4.2).
	Range: 0...100%
C1.4.2 counter decrease	Multiplier for every measurement within the error limit to decrease the counter.
	Range: 01...99
C1.4.3 counter limit	Above this value measurements will not be ignored.
	Range: 000...999
C1.5 simulation	Grouping of all functions for simulating flow sensor values.
	These simulations have effect on all outputs, including counters and display.
C1.5.1 volume flow	For sequence refer to B1.1.
C1.5.2 velocity of sound	For sequence refer to B1.2.
	Range: 200.00...1100.0 (start simulation? yes / no)
C1.6 information	Grouping of all functions related to information with respect to flow sensor and sensor electronics.
C1.6.1 sensor CPU	Identification of hardware and software for flow processing.
	1st line: ID number of the circuit board 2nd line: software version 3rd line: production date

Function	Setting / Description
C1.6.2 sensor DSP	Identification of hardware and software for signal processing.
	1st line: ID number of the circuit board 2nd line: software version 3rd line: production date
C1.6.3 sensor driver	Identification of hardware and software for driver part.
	1st line: ID number of the circuit board 2nd line: software version 3rd line: production date
C1.6.4 calibration date	Format: yyyy-mm-dd
C1.6.5 serial no. sensor	Shows the serial number of the flow sensor.
C1.6.6 V no. sensor	Shows the order number of the flow sensor.
C1.7 monitor VoS	Select: on (start sequence C1.8) / off
C1.8 monitor settings	Select (start sequence C1.8.1 to 1.8.5)
C1.8.1 matching factor	Shows the active ratio between measured and calculated VoS.
C1.8.2 act. ratio meas./ cal.	Shows the actual ratio between measured and calculated VoS (not active).
C1.8.3 new match?	Select: yes (program new matching factor) / no
	Range: 0.50...2.00; value will change C1.8.1
C1.8.4 VoS tolerance	If difference between matching factor and act. ratio meas./ cal. exceeds this value activates error message.
	Range: 00...25%
C1.8.5 time constant	Averages measurement.
	Increasing value improves stability but delays the reaction.
	Range: 0060...3600 s
C1.9 linearization	Correction for non linear deviations of the output.
	Select: start sequence C1.9.1
C1.9.1 linearization	Select: on / off
C1.9.2 dynamic viscosity	Only available if "on" is selected in C1.9.1.
	Select value.
	Range: 0.500...50.00 µPa.s
C1.10 adiabatic index	Value for adiabatic index.
	Select value.
	Range: 1.0000...2.0000

Function	Setting / Description
C1.11 P & T correction	Compensation for thermal and pressure expansion of the flow sensor.
	Select: Normal / None / OPEC / IUPAC / Old Normal (activates options C1.12 to C1.15)
	Calculation of gas flow to standard conditions using input of a temperature and a pressure transmitter.
	P&T correction "Normal": calculation to 0°C and 101.325 kPa (DIN 1343)
	P&T correction "Old Normal": calculation to 15°C, 101.325 kPa (ISO 13443)
	P&T correction "IUPAC": calculation to 0°C and 100 kPa
	P&T correction "OPEC": calculation to 60°F and 14.73 psi
	P&T correction "GOST": calculation to 20°C and 101.325 kPa
	P&T correction "GB/T": calculation to 20°C and 101.325 kPa
	GOST 2939-63/GBT 19205-2008
	Compensation of flow tube expansion/contraction due to temperature and pressure variation.
	Before entering C1.15 (density) first save the setting and leave the menu.
C1.12 P & T inputs	Select: automatic (using input from connected pressure and temperature transmitters) / fixed (manual fixed temperature and pressure setting via menu option C1.13 / C1.14)
C1.13 temperature	Only available if "fixed" is selected in C1.12.
	This is the process temperature.
	Select value.
	Range: -40....+180°C (depending on transducer)
C1.14 pressure	Only available if "fixed" is selected in C1.12.
	This is the process pressure.
	Select value.
	Range: 0...250 bara
C1.15 standard density	Before entering first save the setting in C1.11 and exit the menu.
	Select value for density at reference conditions as selected in C1.11.
C1.16 methane fraction	Enable to calculate methane content of biogas.
C1.17 saturated gas correction	Correction on methane content for saturated biogas.
C1.18 diagnosis value	
C1.18.1 diagnostics 1	Select: none / SNR 1 / gain 1 / velocity of sound 1
C1.18.2 diagnostics 2	Select: none / SNR 2 / gain 2 / velocity of sound 2
C1.18.3 diagnostics 3	Select: none / SNR 3 / gain 3 / velocity of sound 3

C2 inputs/outputs (I/Os)

C2.1 hardware	Assignment of connection terminals dependent on signal converter version: active / passive / NAMUR
C2.1.1 terminals A	Select: off (switched off) / current output / frequency output / pulse output / status output / limit switch / control input / current input (for pressure)
C2.1.2 terminals B	Select: off (switched off) / current output / frequency output / pulse output / status output / limit switch / control input / current input (for temperature)
C2.1.3 terminals C	Select: off (switched off) / current output / status output / limit switch
C2.1.4 terminals D	Select: off (switched off) / frequency output / pulse output / status output / limit switch

Function	Setting / Description

C2._ current input X

C2._ current input X	Only available if terminal A and B are current inputs.
	X stands for connection terminal A or B _ stands for A or B
C2._.1 range 0%...100%	Fixed current range (4...20 mA) for the assigned value range; The range indicated cannot be changed.
C2._.2 extended range	Adjustable, extended, linear range goes from 3.6...21.0 mA. Error ranges: 0.5...<3.6 mA / >21.0...23.0 mA / <0.5 mA open circuit / >23.0 closed circuit
C2._.3 measurement	Terminal A: pressure
	Terminal B: temperature
C2._.4 range	Terminal A: Range: 0...250 bara (assumes absolute pressure) e.g. when an pressure sensor 0...10 barg is used, set range to 1..11 bar
	Terminal B: Range: -50....+180°C (depending on transducer)
	0...xx.xx _ _ _ (format and unit depend on the measured variable, see above)
C2._.5 time constant	Averages measurement
	Increasing value improves stability but delays the reaction.
	Range: 000.2...100.0 s
C2._.6 information	Serial number of the I/O board, software version number and production date of the circuit board.
C2._.7 simulation	Select: cancel / set value
	Terminal A: Range: 0...250 bara
	Terminal B: Range: -50....+180°C (depending on transducer)
C2._.8 4mA trimming	Trimming of the current at 4 mA.
	Range: 3.6000...5.5000 mA
	Reset to 4 mA restores the factory calibration.
	Used for HART® setting.
C2._.9 20mA trimming	Trimming of the current at 20 mA.
	Range: 18.500...21.500 mA
	Reset to 20 mA restores the factory calibration.
	Used for HART® setting.

C2._ current out X

C2._ current out X	X stands for one of the connection terminals A, B or C _ stands for A, B or C
C2._.1 range 0%...100%	Current range for the selected "measurement", e.g. 4...20 mA, corresponds to 0...100%
	xx.x ... xx.x mA; range: 0.00...20 mA Condition: 0 mA ≤ 1st value ≤ 2nd value ≤ 20 mA
C2._.2 extended range	Min. and max. limits of current values. If the current range is exceeded, the current is set to these limits.
	xx.x ... xx.x mA; range: 03.5...21.5 mA Condition: 03.5 mA ≤ 1st value ≤ 2nd value ≤ 21.5 mA

Function	Setting / Description
C2._.3 error current	Specify error current.
	xx.x mA; range: 3...22 mA Condition: outside of extended range
C2._.4 error condition	Set the error conditions.
	Select: error in device (error category [F]) / application error (error category [F]) / out of specification (error category [S])
C2._.5 measurement	Measurements for activating the output.
	Select: volume flow / corr. volume flow / mass flow / molar mass / flow speed / velocity of sound / gain / diagnostics 1, 2, 3 / methane fraction
C2._.6 range	0...100% of the "measurement" set in C2._.5.
	x.xx...xx.xx _ _ _ (format and unit depend on the "measurement", see above)
C2._.7 polarity	Set polarity, please note flow direction in C1.3.2!
	Select: both polarities (plus and minus values are displayed) / positive polarity (display for negative values = 0) / negative polarity (display for positive values = 0) / absolute value (always displays positive, with both negative and positive values)
C2._.8 limitation	Limitation before applying the time constant.
	xxx range: -150...+150%
C2._.9 low flow cutoff	Sets the measurement to "0" for low values.
	x.xxx ± x.xxx L/h; range: 0.0...20 L/h
	(1st value = switching point / 2nd value = hysteresis); condition: 2nd value ≤ 1st value
C2._.10 time constant	Averages measurement
	Increasing value improves stability but delays the reaction.
	Range: 000.1...100.0 s
C2._.11 special function	When activated, changing the range improves the resolution.
	Select: off (switched off) / automatic range (range is changed automatically, extended lower range, only makes sense together with a status output) / external range (change by control input, extended lower range, control input must also be activated)
C2._.12 threshold	Appears only if "C2._.11 threshold" is activated between extended and normal range. The automatic range function always changes from the extended to the normal range when the 100% current is reached. The upper 100% value of the hysteresis is then = 0. The threshold is then the hysteresis value, instead of "threshold ± hysteresis" as shown in the display.
	Range: 05.0...80%
	(1st value = switching point / 2nd value = hysteresis); condition: 2nd value ≤ 1st value
C2._.13 information	Serial number of the I/O board, software version number and production date of the circuit board.
C2._.14 simulation	For sequence refer to "B1._ current output X".
C2._.15 4mA trimming	Trimming of the current at 4 mA.
	Reset to 4 mA restores the factory calibration.
	Used for HART® setting.
C2._.16 20mA trimming	Trimming of the current at 20 mA.
	Reset to 20 mA restores the factory calibration.
	Used for HART® setting.

Function	Setting / Description

C2._ frequency out X

C2._ frequency out X	X stands for one of the connection terminals A, B or D _ stands for A, B or D
C2._.1 pulse shape	Specify the pulse shape.
	Select: symmetric (about 50% on and 50% off) / automatic (constant pulse with about 50% on and 50% off at 100% pulse rate) / fixed (fixed pulse rate; for setting refer to "C2._.3 100% pulse rate")
	Symmetric (about 50% on and 50% off).
C2._.2 pulse width	Only available if set to "fixed" in C2._.1.
	Range: 0.05...2000 ms
	Note: max. setting value Tp [ms] ≤ 500 / max. pulse rate [1/s], gives the pulse width = time where the output is activated
C2._.3 100% pulse rate	Pulse rate for 100% of the measuring range.
	Range: 0.0...10000 1/s
	Limitation 100% pulse rate ≤ 100/s: I_{max} ≤ 100 mA Limitation 100% pulse rate > 100/s: I_{max} ≤ 20 mA
C2._.4 measurement	Measurements for activating the output.
	Select: volume flow / corr. volume flow / mass flow / molar mass / flow speed / velocity of sound / gain / diagnostics 1, 2, 3 / methane fraction
C2._.5 range	0...100% of the "measurement" set in C2._.4
	x.xx...xx.xx _ _ _ (format and unit depend on the "measurement", see above)
C2._.6 polarity	Set polarity, please note flow direction in C1.3.2!
	Select: both polarities (plus and minus values are displayed) / positive polarity (display for negative values = 0) / negative polarity (display for positive values = 0) / absolute value (always displays positive, with both negative and positive values)
C2._.7 limitation	Limitation before applying the time constant.
	±xxx ... ±xxx%; range: -150...+150%
C2._.8 low flow cutoff	Sets the measurement to "0" for low values.
	x.xxx ± x.xxx L/h; range: 0.0...20 L/h
	(1st value = switching point / 2nd value = hysteresis); condition: 2nd value ≤ 1st value
C2._.9 time constant	Averages measurement
	Increasing value improves stability but delays the reaction.
	Range: 000.1...100 s
C2._.10 invert signal	Select: off (activated output: switch closed) / on (activated output: switch open)
C2._.11 phase shift w.r.t. B	Only available when configuring the A or D terminal and only if output B is a pulse or frequency output. If setting in C2.5.6 is "both polarities", the phase shift is prefixed by a symbol, e.g. -90° and +90°
	Select: off (no phase shift) / 0° phase shift (between outputs A or D and B, inversion possible) / 90° phase shift (between outputs A or D and B, inversion possible) / 180° phase shift (between outputs A or D and B, inversion possible)
C2._.12 information	Serial number of the I/O board, software version number and production date of the circuit board.
C2._.13 simulation	For sequence refer to "B1._ frequency out X".

Function	Setting / Description

C2._ pulse output X

C2._ pulse output X	X stands for one of the connection terminals A, B or D _ stands for A, B or D.
C2._.1 pulse shape	Specify the pulse shape.
	Select: symmetric (about 50% on and 50% off) / automatic (constant pulse with about 50% on and 50% off at 100% pulse rate) / fixed (fixed pulse rate, for setting refer to "C2._.3 100% pulse rate")
C2._.2 pulse width	Set time for pulse activation.
	Only available if set to "fixed" in C2._.1.
	Range: 0.05...2000 ms
	Note: max. setting value Tp [ms] ≤ 500 / max. pulse rate [1/s], gives the pulse width = time where the output is activated
C2._.3 max. pulse rate	Pulse rate for 100% of the measuring range.
	Range: 0.01...10000 1/s
	Limitation 100% pulse rate ≤ 100/s: I_{max} ≤ 100 mA Limitation 100% pulse rate > 100/s: I_{max} ≤ 20 mA
C2._.4 measurement	Measurements for activating the output.
	Select: volume flow / mass flow / corr. volume flow
C2._.5 value p. pulse	Set value for volume or mass per pulse.
	xxx.xxx (format and unit depend on the measured variable)
	At max. pulse rate refer to "C2._.3 pulse output".
C2._.6 polarity	Set polarity, please note flow direction in C1.3.2!
	Select: both polarities (plus and minus values are displayed) / positive polarity (display for negative values = 0) / negative polarity (display for positive values = 0) / absolute value (use for the output)
C2._.7 low flow cutoff	Sets the measurement to "0" for low values.
	(1st value = switching point / 2nd value = hysteresis); condition: 2nd value ≤ 1st value
C2._.8 time constant	Averages measurement
	Increasing value improves stability but delays the reaction.
	Range: 000.1...100 s
C2._.9 invert signal	Select: off (activated output generates a high current at the output, switch closed) / on (activated output generates a low current at the output, switch open)
C2._.10 phase shift w.r.t. B	Only available when configuring the A or D terminal and only if output B is a pulse or frequency output. If setting in C2.5.6 is "both polarities", the phase shift is prefixed by a symbol, e.g. -90° and +90°
	Select: off (no phase shift) / 0° phase shift (between outputs A or D and B, inversion possible) / 90° phase shift (between outputs A or D and B, inversion possible) / 180° phase shift (between outputs A or D and B, inversion possible)
C2._.11 information	Serial number of the I/O board, software version number and production date of the circuit board.
C2._.12 simulation	Simulation of pulse output.
	For sequence refer to "B1._ pulse output X".

Function	Setting / Description

C2._ status output X

C2._ status output X	X (Y) stands for one of the connection terminals A, B, C or D _ stands for A, B, C or D
C2._.1 mode	The output shows the following measuring conditions: Select: out of specification (output set, signals status of category "error in device" or "application error" or "out of specification" refer to *Error messages* on page 94) / application error (output set, signals status of the category "error in device" or "application error" refer to *Error messages* on page 94) / polarity flow (polarity of the current flow) / over range flow (over range of the flow) / counter 1 preset (activates when counter X preset value is reached) / counter 2 preset (activates when counter X preset value is reached) / counter 3 preset (only available for special I/O) / output A (activated by the status of output Y, additional output data see below) / output B (activated by the status of output Y, additional output data see below) / output C (activated by the status of output Y, additional output data see below) / output D (activated by the status of output Y, additional output data see below) / off (switched off) / error in device (when error, output activated)
C2._.2 current out Y	Only appears if output A...C is set under "mode (see above)", and this output is a "current output".
	Select: polarity (is signalled) / over range (is signalled) / range change C
C2._.2 frequency out Y C2._.2 pulse output Y	Only appears if output A, B or D is set under "mode (see above)", and this output is a "frequency/pulse output".
	Select: polarity (is signalled) / over range (is signalled)
C2._.2 status output Y	Only appears if output A...D is set under "mode (see above)", and this output is a "status output".
	Select: same signal (like other connected status output, signal can be inverted, see below)
C2._.2 limit switch Y C2._.2 control input Y	Only appears if output A...D / input A or B is set under "mode (see above)", and this output / input is a "limit switch / control input".
	Select: status off (is always selected here if status output X is connected with a limit switch / control input Y)
C2._.2 off	Only appears if output A...D is set under "mode (see above)" and this output is switched off.
C2._.3 invert signal	Select: off (activated output: switch closed) / on (activated output: switch open)
C2._.4 information	Serial number of the I/O board, software version number and production date of the circuit board.
C2._.5 simulation	For sequence refer to "B1._ status output X".

C2._ limit switch X

C2._ limit switch X	X stands for one of the connection terminals A, B, C or D _ stands for A, B, C or D
C2._.1 measurement	Measurements for activating the output.
	Select: volume flow / corr. volume flow / mass flow / molar mass / flow speed / velocity of sound / gain / diagnostics 1, 2, 3 / methane fraction
C2._.2 threshold	Switching level, set threshold with hysteresis
	xxx.x ±x.xxx (format and unit depending on the "measurement", see above)
	(1st value = threshold / 2nd value = hysteresis), condition: 2nd value ≤ 1st value

Function	Setting / Description
C2._.3 polarity	Set measured value polarity, please note flow direction in C1.3.2!
	Select: both polarities (plus and minus values are displayed) / positive polarity (display for negative values = 0) / negative polarity (display for positive values = 0) / absolute value (always displays positive, with both negative and positive values)
C2._.4 time constant	Averages measurement
	Increasing value improves stability but delays the reaction.
	Range: 000.1...100 s
C2._.5 invert signal	Define limit switch activation.
	Select: off (activated output: switch closed) / on (activated output: switch open)
C2._.6 information	Serial number of the I/O board, software version number and production date of the circuit board.
C2._.7 simulation	For sequence refer to "B1._ limit switch X".

C2._ control input X

C2._ control input X	X stands for connection terminal A or B _ stands for A or B
C2._.1 mode	Select: off (control input switched off) / hold all outputs (hold current values, not display and counters) / output Y (hold current values) / all outputs to zero (current values = 0%, not display and counters) / output Y to zero (current value = 0%) / all counters (reset all counters to "0") / counter "Z" reset (set counter 1, (2 or 3) to "0") / stop all counters / stop counter "Z" (stops counter 1, (2 or 3) / zero outp.+stop Cnt. (all outputs 0%, stop all counters, not the display) / external range Y (control input for external range of current output Y) - also make this setting on current output Y (no check if current output Y is available) / error reset (all resettable errors are deleted)
C2._.2 invert signal	Select: off (control input is activated when a current is applied at the input by voltage to passive inputs or a low-value resistor to active inputs) / on (control input is activated when no current is applied at the input, low voltage to passive inputs or a high-value resistor to active inputs)
C2._.3 information	Serial number of the I/O board, software version number and production date of the circuit board.
C2._.4 simulation	For sequence refer to "B1._ control input X".

C3 I/O counter

C3.1 counter 1	Set function of counter. _ stands for 1, 2, 3 (= counter 1, 2, 3) The basic version (standard) has only 2 counters! _ stands for 1, 2, 3
C3.2 counter 2	
C3.3 counter 3	
C3._.1 funct. of counter	Select: sum counter (counts positive + negative values) / + counter (counts only the positive values) / - counter (counts only the negative values) / off (counter is switched off)
C3._.2 measurement	Selection of the "measurement" for counter _.
	Select: volume flow / mass flow / corr. volume flow
C3._.3 low flow cutoff	Sets low flow values to "0".
	(1st value = switching point / 2nd value = hysteresis); condition: 2nd value ≤ 1st value

Function	Setting / Description
C3._.4 time constant	Averages measurement
	Increasing value improves stability but delays the reaction.
	Range: 000.0...100.0 s
C3._.5 preset value	If this value is reached, positive or negative, a signal is generated that can be used for a status output at which "preset counter X" has to be set.
	Preset value (max. 8 digits) x.xxxxx in selected unit, refer to C5.7.9 + 12
C3._.6 reset counter	For sequence refer to A3.2, A3.3 and A3.4.
C3._.7 set counter	Set counter _ to the desired value.
	Select: break (exit function) / set value (opens the editor to make the entry)
	Query: set counter?
	Select: no (exit function without setting the value) / yes (sets the counter and exits the function)
C3._.8 stop counter	Counter _ stops and holds the current value.
	Select: no (exits the function without stopping the counter) / yes (stop the counter and exits the function)
C3._.9 start counter	Start counter _ after that counter is stopped.
	Select: no (exits the function without starting the counter) / yes (starts the counter and exits the function)
C3._.10 information	Serial number of the I/O board, software version number and production date of the circuit board.

C4 I/O HART

C4 I/O HART	Selection / display of the 4 dynamic variables (DV) for HART®.
	The HART® current output (terminal A basic I/Os or terminal C modular I/Os) always has a fixed link to the primary variables (PV). Fixed links of the other DVs (1-3) are only possible if additional analogue outputs (current and frequency) are available; if not, the "measurement" can be freely selected from the list in "A4.1 measurement".
	_ stands for 1, 2, 3 or 4 X stands for connection terminals A...D
C4.1 PV is	Current output (primary variable)
C4.2 SV is	(secondary variable)
C4.3 TV is	(third variable)
C4.4 4V is	(fourth variable)
C4.5 HART units	Function to make the change of the units for the DVs (dynamic variables) possible.
	Select: break (return with ↵ key) / HART® display (copies the settings for the display units to the settings for the DVs) / load defaults (resets the DVs to the factory defaults)
C4._.1 current out X	Shows the current analogue measured value of the linked current output. The "measurement" cannot be changed!
C4._.1 frequency out X	Shows the current analogue measured value of the linked frequency output. If present, the "measurement" cannot be changed!
C4._.1 HART dynamic var.	Measurements of the dynamic variables for HART®.
	Select (linear): volume flow / corr. volume flow / mass flow / molar mass / flow speed / velocity of sound / gain / diagnostics 1,2,3
	Select (digital): counter 1 / counter 2 / counter 3 / operating hours

Function	Setting / Description

C5 device

C5.1 device info	Grouping of all functions that have no direct effect on the measurement or any output.
C5.1.1 Tag	Settable characters (max. 8 digits): A...Z; a...z; 0...9; / - , .
C5.1.2 C number	CG number, cannot be changed; describes the signal converter version.
C5.1.3 device serial no.	Serial number of the system; cannot be changed.
C5.1.4 electronic serial no.	Serial number of the electronic assembly; cannot be changed.
C5.1.5 SW.REV.MS	Serial number of the circuit board, version number of the main software, production date of the circuit board.
C5.1.6 Electronic Revision ER	Reference identification number, electronic revision and production date of the device; includes all hardware and software changes
C5.2 display	
C5.2.1 language	Language selection depends on the device version.
C5.2.2 contrast	At extreme temperatures the contrast on the display can be adjusted. Setting: -9...0...+9
	This change takes place immediately, not just when setting mode is exited!
C5.2.3 default display	Specification of the default display page that is returned to after a short delay period.
	Select: none (current page is always active) / 1. meas. page (shows this page) / 2. meas. page (shows this page) / status page (shows only status messages) / graphic page (trend of the 1st measurement)
C5.2.5 SW.REV.UIS	Serial number of the circuit board, version number of user interface software, production date of the circuit board.
C5.3 1. meas. page	_ stands for 3 = 1. meas. page and 4 = 2. meas. page
C5.4 2. meas. page	
C5._.1 function	Specify the number of measured value lines (font size).
	Select: one line / two lines / three lines
C5._.2 measurement 1.line	Specify measurement for 1st line.
	Select: volume flow / corr. volume flow / mass flow / molar mass / flow speed / velocity of sound / gain / diagnostics 1, 2, 3 / methane fraction
C5._.3 range	0...100% of the "measurement" set in C5._.2.
	x.xx...xx.xx _ _ _ (format and unit depending on the "measurement")
C5._.4 limitation	Limitation before applying the time constant.
	±xxx...±xxx%; range: -120...+120%
C5._.5 low flow cutoff	Sets low flow values to "0".
	(1st value = switching point / 2nd value = hysteresis); condition: 2nd value ≤ 1st value
C5._.6 time constant	Averages measurement
	Increasing value improves stability but delays the reaction.
	Range: 0.1...100 s
C5._.7 format 1.line	Specify decimal places.
	Select: automatic (adaptation is automatic) / X (= none) ...X.XXXXXXXX (max. 8 digits)

Function	Setting / Description
C5._.8 measurement 2.line	Specify "measurement 2.line" (only available if this 2nd line is activated)
	Select: bargraph (for the measurement selected in 1st line) / volume flow / corr. volume flow / mass flow / molar mass / flow speed / velocity of sound / gain / diagnostics 1, 2, 3 / counter 1, 2, 3 / operating hours / methane fraction
C5._.9 format 2.line	Specify decimal places.
	Select: automatic (adaptation is automatic) / X (= none) ...X.XXXXXXXX (max. 8 digits)
C5._.10 measurement 3.line	Specify "measurement 3.line" (only available if this 3rd line is activated).
	Select: volume flow / corr. volume flow / mass flow / molar mass / flow speed / velocity of sound / gain / diagnostics 1, 2, 3 / counter 1, 2 / operating hours
C5._.11 format 3.line	Specify decimal places.
	Select: automatic (adaptation is automatic) / X (= none) ...X.XXXXXXXX (max. 8 digits)
C5.5 graphic page	
C5.5.1 select range	The graphic page always shows trend curve of the "measurement" of the 1. meas. page / 1.line (refer to C5.3.2).
	Select: manual (set range in C5.5.2) / automatic (automatic depiction based on the measured values) Reset only after parameter change or after switching off and on.
C5.5.2 range	Set the scaling for the Y axis. Only available if "manual" is set in C5.5.1.
	±xxx...±xxx%; range: -100...+100%
	(1st value = lower limit / 2nd value = upper limit); condition: 1st value ≤ 2nd value
C5.5.3 time scale	Set the time scaling for the X axis (trend curve).
	xxx min; range: 0...100 min
C5.6 special functions	
C5.6.1 reset errors	Query: reset errors?
	Select: no / yes
C5.6.2 save settings	Save current settings. Select: cancel (exit function without saving) / backup 1 (saves the settings in the backup 1 storage place) / backup 2 (saves the settings in the backup 2 storage place)
	Query: go on with copy? (cannot be undone) Select: no (exit function without saving) / yes (copy current settings to storage backup 1 or backup 2)
C5.6.3 load settings	Load saved settings. Select: cancel (exit function without loading) / factory settings (reload factory settings) / backup 1 (loads the settings from the backup 1 storage place) / backup 2 (loads the settings from the backup 2 storage place) / load sensor data (restore factory setting of the values for the flow sensor. Display and I/O settings are retained!)
	Query: go on with copy? (cannot be undone) Select: no (exit the function without saving) / yes (load data from the selected storage place)
C5.6.4 password quick set	Password required to change data in the menu "quick setup".
	0000 (= to this menu without password)
	xxxx (password required); range (4 digits): 0001...9999
C5.6.5 password setup	Password required to change data in the menu "setup".
	0000 (= to this menu without password)
	xxxx (password required); range (4 digits): 0001...9999

Function	Setting / Description
C5.6.6 GDC IR interface	After this function has been activated an optical GDC adapter can be connected to the LC display. If approximately 60 seconds pass without a connection being established or after the adapter is removed, then the function is exited and the optical keys are active once again.
	Select: break (exit function without connection) / activate (the IR interface (adapter) and interrupt the optical keys)
C5.7 units	
C5.7.1 size	mm; inch
C5.7.2 volume flow	m³/d; m³/h; m³/min; m³/s; L/h; L/min; L/s (L = litres); ext. unit selection (activates option for more units; for sequence refer to below); cf/d; cf/h; cf/m; cf/s
C5.7.3 ext. unit selection	Active if "ext. unit selection" is selected in C5.7.2.
	MMcf/d; Mcf/d; MMcf/h; Mcf/h; free unit (set factor and text in the next two functions; for sequence refer to below)
C5.7.4 text free unit	Active if "free unit" is selected in C5.7.3.
	For text to be specified refer to *Set free units* on page 91.
C5.7.5 [m³/s]*factor	Specification of the conversion factor, based on m³/s:
	For information refer to *Set free units* on page 91.
C5.7.6 corr. volume flow	MMscf/d; Mscf/d; MMscf/h; Mscf/h; scf/d; scf/h; scf/m; scf/s; Nm³/d; Nm³/h; free unit (set factor and text in the next two functions; sequence refer to below)
C5.7.7 text free unit	Active if "free unit" is selected in C5.7.6.
	For text to be specified refer to *Set free units* on page 91.
C5.7.8 [Normal m³/s]*factor	Specification of the conversion factor, based on normal m³/s.
	For information refer to *Set free units* on page 91.
C5.7.9 mass flow	lb/h; lb/s; t/h; kg/h; kg/s; free unit (set factor and text in the next two functions; for sequence refer to below)
C5.7.10 text free unit	Active if "free unit" is selected in C5.7.9.
	For text to be specified refer to *Set free units* on page 91.
C5.7.11 [kg/s]*factor	Specification of the conversion factor, based on kg/s.
	For information refer to *Set free units* on page 91.
C5.7.12 specific enthalpy	kJ/kg; free unit
C5.7.13 text free unit	Active if "free unit" is selected in C5.7.12.
	For text to be specified refer to *Set free units* on page 91.
C5.7.14 [J/kg]*factor	Specification of the conversion factor. based on J/kg.
	For information refer to *Set free units* on page 91.
C5.7.15 velocity	m/s; ft/s
C5.7.16 volume	Cf; m³; L; ext. unit selection (activates option for more units; for sequence refer to below)
C5.7.17 ext. unit selection	Active if "ext. unit selection" is selected in C5.7.16.
	MMcf; Mcf; free unit (set factor and text in the next two functions; for sequence refer to below)
C5.7.18 text free unit	Active if "free unit" is selected in C5.7.17.
	For text to be specified refer to *Set free units* on page 91.
C5.7.19 [m³]*factor	Specification of the conversion factor, based on m³.
	For information refer to *Set free units* on page 91.
C5.7.20 corrected volume	MMscf; Mscf; scf; Nm³; free unit (set factor and text in the next two functions; for sequence refer to below)

Function	Setting / Description
C5.7.21 text free unit	Active if "free unit" is selected in C5.7.20.
	For text to be specified refer to *Set free units* on page 91.
C5.7.22 [Normal m³]*factor	Specification of the conversion factor, based on normal m³.
	For information refer to *Set free units* on page 91.
C5.7.23 mass	Lb; t; kg; free unit (set factor and text in the next two functions, sequence see below)
C5.7.24 text free unit	Active if "free unit" is selected in C5.7.23.
	For text to be specified refer to *Set free units* on page 91.
C5.7.25 [kg]*factor	Specification of the conversion factor, based on kg.
	For information refer to *Set free units* on page 91.
C5.7.26 density	Lb/cf; kg/m³; kg/l; free unit (set factor and text in the next two functions, sequence see below)
C5.7.27 text free unit	Active if "free unit" is selected in C5.7.26.
	For text to be specified refer to *Set free units* on page 91.
C5.7.28 [kg/m³]*factor	Specification of the conversion factor, based on kg/m³.
	For information refer to *Set free units* on page 91.
C5.7.29 pressure	bar; kPa; Pa; psi
C5.7.30 temperature	°C; K; °F
C5.8 HART	This function is only available for devices with a HART® interface!
C5.8.1 HART	Switch the HART® communication on or off.
	Select: on (HART® activated); possible current range for current output 4...20 mA / off (HART® not activated); possible current range for current output 0...20 mA
C5.8.2 address	Set address for HART® operation.
	Select: 00 (point-to-point operation, current output has normal function, current = 4...20 mA) / 01...15 (Multi-Drop operation, current output has a constant setting of 4 mA)
C5.8.3 message	Set required text:
	A...Z ; a...z ; 0...9 ; / - + , .*
C5.8.4 description	Set required text:
	A...Z ; a...z ; 0...9 ; / - + , .*
C5.9 quick setup	Activate quick access in the menu "quick setup". Default: "quick setup" is active (yes)
	Select: yes (activated) / no (not activated)
C5.9.1 reset counter 1, 2, 3	Reset of counter 1, 2, 3 can be activated or deactivated.
	Select: yes (activated) / no (not activated)

6.3.4 Set free units

Free units	Sequences to set texts and factors
Texts	
Volume flow, mass flow and density:	3 digits before and after the slash xxx/xxx (max. 3 digits before / after the slash)
Volume, mass:	xxx (max. 3 digits)
Permissible characters:	A...Z ; a...z ; 0...9 ; / - + , .*; @ $ % ~ () [] _
Conversion factors	
Desired unit	= [unit see above] * conversion factor
Conversion factor	Max. 9 digits
Shift decimal point:	↑ to the left and ↓ to the right

6.4 Description of functions

6.4.1 Reset counter in the menu "A quick setup"

INFORMATION!
It may be necessary to activate resetting of the counter in the menu "A quick setup".

Key	Function	Description and setting
►	A quick setup	Press and hold for 2.5 s, then release the key.
►	A1 language	-
▼	A2.3 reset all totalisers	Select desired counter(s)
▼	A3 reset	-
►	A3.1 reset errors	-
▼	A3.2 counter 1	Select desired counter.
▼	A3.3 counter 2	
▼	A3.4 counter 3	
►	Query: reset counter? Select: no	-
▼ or ▲	Query: reset counter? Select: yes	-
↲	A3.2 counter 1, A3.3 counter 2 (or A3.4 counter 3)	Counter has been reset.
3 x ↲	Measuring mode	-

Key	Function	Description and setting
►	A quick setup	Press and hold for 2.5 s, then release the key.
►	A1 language	-
▼	A2 reset	-
►	A2.1 reset errors	-
▼	A2.2 Stop All Simulations	Select desired counter(s)
▼	A2.3 reset all totalisers	
▼	A2.4 totaliser 1	Select desired counter.
▼	A2.5 totaliser 2	
►	Query: reset totaliser ? Select: no	-
▼ or ▲	Query: reset totaliser ? Select: yes	-
↲	A2.4 totaliser 1, A2.5 totaliser 2	Counter has been reset.
3 x ↲	Measuring mode	-

6.4.2 Deleting error messages in the menu "A quick setup"

Key	Function	Description and setting
►	A quick setup	Press and hold for 2.5 s, then release the key.
►	A1 language	-
2 x ▼	A3 reset	-
►	A3.1 reset errors	-
►	Query: reset errors? Select: no	-
▲ or ▼	Query: reset errors? Select: yes	-
↲	A3.1 reset errors	Error has been reset.
3 x ↲	Measuring mode	-

Key	Function	Description and setting
►	A quick setup	Press and hold for 2.5 s, then release the key.
►	A1 language	-
2 x ▼	A2 reset	-
►	A2.1 reset errors	-
►	Query: reset errors? Select: no	-
▲ or ▼	Query: reset errors? Select: yes	-
↲	A2.1 reset errors	Error has been reset.
3 x ↲	Measuring mode	-

6.5 Error messages

Messages on the display	Description	Actions
F error in device	No measurement possible, measured values are not valid.	Repair or replace device and/or CPU. Contact manufacturer service center.
F application error	No measurement possible, but device ok.	Check parameter settings / power off - wait 5 seconds - power on device.
S out of specification	Unreliable measurement.	Maintenance required, check flow profile.
C check in progress	Test function is active, device is stand-by.	Wait until finished.
I information	No direct impact on measurements.	No action needed.

Messages on the display	Description	Actions
F error in device	No measurement possible, measured values are not valid.	Repair or replace device and/or CPU; contact manufacturer service center.
F IO 1 **F** IO 2	Error or failure of IO module 1 (or 2).	Try to load settings (C5.6.3). If error does not disappear, replace electronics unit.
F parameter	Error or failure of data manager, parameter or hardware error.	Try to load settings (C5.6.3). If error does not disappear, replace electronics unit.
F configuration	Incorrect configuration or no confirmation.	Confirm change of module. If configuration is unchanged, replace electronics unit.
F display	Error or failure of display unit, parameter or hardware error.	Defect; replace electronics units.
F current in/output A/B	Error or failure of the current input or output A or B, parameter or hardware error.	Defect; replace electronics units.
F current output C	Error or failure of the current output C, parameter or hardware error.	Defect; replace electronics units.
F software user interface	Error in software operation detected.	Defect; replace electronics units.
F hardware settings	Detected hardware and set hardware settings do not match.	Follow display instructions.
F hardware detection	Hardware can not be detected.	Defect; replace electronics units.
F RAM/ROM error IO 1 **F** RAM/ROM error IO 2	RAM or ROM error detected.	Defect; replace electronics units.
F fieldbus	Malfunction of the fieldbus interface profibus or FF or Modbus / Ethernet interface.	Contact manufacturer service center.
F communication dsp-up	Error in or failure of the communication between the processors, parameter or hardware error.	Defect; replace electronics unit.
F sensor driver	Sensor driver is malfunctioning.	Replace electronics units.
F uProc.	Microcontroller is malfunctioning.	Replace electronics units.
F dsp	DSP is malfunctioning.	Replace electronics units.
F parameter frontend	Invalid parameter or combination of parameters at the frontend.	Defect; replace electronics units.
F application error	Application-dependent error of the complete device, device is however ok.	-
F open circuit A F open circuit B F open circuit C	Current on current output A (or B, C) to low.	Check cable or reduce resistance (< 1000 Ω).

Messages on the display	Description	Actions
F methane fract.exceed limit	Methane calculation is above 100% or below 0%.	Check temperature sensor reading and process conditions.
F over range A F over range B F over range C	Current on current output A (or B, C) is limited by parameter setting.	Extend upper or lower limit for current output in C2._.8.
F over range A F over range B F over range C	Pulse on frequency output A (or B, D) is limited by parameter setting.	Extend upper or lower limit for frequency output in menu C2._.7.
F active settings	Error during CRC check (Cyclic Redundancy Check) of the active settings.	Load settings; factory setting, backup 1 or backup 2.
F factory settings	Error during CRC check of factory settings.	-
F backup 1 settings F backup 2 settings	Error during CRC check of backup 1 (or 2) settings.	Save active settings in backup 1 or backup 2.
F wiring A F wiring B	Current of current input is below 0.5 mA or above 23 mA.	Check connection of control input or current input.
	Open or short circuit of control input A (or B).	
F flow exceeding limit	Over range, the measured values are limited by the filter setting.	Limitation C1.3.1, increase values.
F signal lost path 1 F signal lost path 2 F signal lost path 3	Signal lost on path 1 (2, or 3).	Check vacuum, composition of gas or collection of liquid in transducer tubes.
F transducer delay	Invalid on-line measurement of the transducer delay.	-
F temperature input	No temperature data available.	-
F pressure input	No pressure data available.	-
S out of specification	Unreliable measurement.	Maintenance required, check flow profile.
S overflow counter 1 S overflow counter 2 S overflow counter 3	Counter is overflowing and will start again at zero.	No action needed.
S backplane invalid	Error during CRC check of backplane.	Restore data records on backplane.
S error current A S error current B	Error current at current input A (or B).	-
S unreliable 1 S unreliable 2 S unreliable 3	Signal detection of path 1 (or 2 or 3) is difficult due to excessive noise or variations in the amplitude of the received signal. The accuracy is not guaranteed.	-
S frontend calibration	Invalid calibration data of the frontend.	-
S dsp timing error	Ping time of the frontend is too short.	-
C checks in progress	Test run of the device, measured value can be set to simulated measured values or to a fixed value.	-
C simulation flow	Sensor electronics simulates measurement of volume flow.	-
C simulation VoS	Sensor electronics simulates measurement of velocity of sound.	-
C simulation fieldbus	Simulation is active on the fieldbus values.	-
I counter 1 stopped I counter 2 stopped I counter 3 stopped	Counter has stopped.	Reset counter in C5.9.1 (or C5.9.2, C5.9.3).
I power fail	The device was not in operation for an unknown period of time.	Temporary power failure, counters did not run during the failure.

Messages on the display	Description	Actions
I control input A active I control input B active	Information only.	No action needed.
I over range display 1 I over range display 2	1st row on 1st (or 2nd) measurement page is limited by parameter setting.	Extend upper or lower limit for limitation in C5.3.4 (or C5.4.4).
I backplane sensor	Incompatible data sensor on backplane.	-
I backplane settings	Incompatible data on backplane.	-
I backplane difference	Different data on backplane and display.	-
I optical interface	GDC IR interface is operational, local display can not be used.	The keys are ready for operation again 60 seconds after the end of data transfer / removal of GDC IR interface.
I write cycles overfl.	The maximum number of write cycles of the EEPROM or FRAMS on the Profibus PCB has been exceeded.	-
I baudrate search	Searching for the baudrate of the Profibus DP interface.	-
I no data exchange	No data exchange between signal converter and Profibus.	-
I start up	The signal converter is starting up and wait time is required.	-

7.1 Spare parts availability

The manufacturer adheres to the basic principle that functionally adequate spare parts for each device or each important accessory part will be kept available for a period of 3 years after delivery of the last production run for the device.

This regulation only applies to spare parts which are subject to wear and tear under normal operating conditions.

7.2 Availability of services

The manufacturer offers a range of services to support the customer after expiration of the warranty. These include repair, maintenance, technical support and training.

INFORMATION!
For more precise information, please contact your local sales office.

7.3 Returning the device to the manufacturer

7.3.1 General information

This device has been carefully manufactured and tested. If installed and operated in accordance with these operating instructions, it will rarely present any problems.

WARNING!
Should you nevertheless need to return a device for inspection or repair, please pay strict attention to the following points:

- *Due to statutory regulations on environmental protection and safeguarding the health and safety of the personnel, the manufacturer may only handle, test and repair returned devices that have been in contact with products without risk to personnel and environment.*
- *This means that the manufacturer can only service this device if it is accompanied by the following certificate (see next section) confirming that the device is safe to handle.*

WARNING!
If the device has been operated with toxic, caustic, radioactive, flammable or water-endangering products, you are kindly requested:

- *to check and ensure, if necessary by rinsing or neutralising, that all cavities are free from such dangerous substances,*
- *to enclose a certificate with the device confirming that it is safe to handle and stating the product used.*

7.3.2 Form (for copying) to accompany a returned device

CAUTION!
To avoid any risk for our service personnel, this form has to be accessible from outside of the packaging with the returned device.

Company:		Address:
Department:		Name:
Telephone number: Fax number:		Email address:
Manufacturer order number or serial number:		
The device has been operated with the following medium:		
This medium is:		radioactive
		water-hazardous
		toxic
		caustic
		flammable
		We checked that all cavities in the device are free from such substances.
		We have flushed out and neutralized all cavities in the device.
We hereby confirm that there is no risk to persons or the environment caused by any residual media contained in this device when it is returned.		
Date:		Signature:
Stamp:		

7.4 Disposal

LEGAL NOTICE!
Disposal must be carried out in accordance with legislation applicable in your country.

Separate collection of WEEE (Waste Electrical and Electronic Equipment):

According to the directive 2012/19/EU or UK Regulation 2013 No. 3113, the monitoring and control instruments marked with the WEEE symbol and reaching their end-of-life **must not be disposed of with other waste**.
The user must dispose of the WEEE to a designated collection point for the recycling of WEEE or send them back to our local organisation or authorised representative.

7.5 Disassembly and recycling

This section briefly describes the instructions of handling and disassembling the device when it has reached the end of its useful life (EOL) or is disposed of after usage. The information given is sufficient to gather the most important parts of the device (by the end-user) which can be used for recycling.

Detailed information needed by WEEE collection and/or dismantling centre and recycling operators (and companies) is available on request at the support centre.

Product description and data/info:

Measuring sensor for flow measurement

Range	1	2	3	4	5
Weight range [kg]:	< 50	50...100	100...200	200...400	> 400
Dimensions [mm]					
L	320...540	490...580	600...670	650...760	830...870
H	195...370	378...481	450...625	602...814	708...817
W	300...4430	421...517	464...623	620...840	730...845
Volume [m^3]	0.02	0.08...0.14	0.13...0.24	0.27...0.52	0.43...0.6
Weight (average) [kg]:	28	77	148	266	470

Range	1	2	3	4	5
Weight range [lb]:	< 50	50...100	100...200	200...400	> 400
Dimensions [inch]					
L	14.2...24.4	21.3...26	24.4...28.7	26.8...32.7	31.9...38.2
H	7.5...12.3	9.9...16.9	13.1...21.0	17.0...27.3	21.9...34.0
W	11.8...15.2	12.8...18.7	14.1...21.3	18.5...27.5	24.0...36.0
Volume [$inch^3$]	1253...4573	2950...7572	4796...12848	8441...24554	16773...46076
Weight (average) [lb]:	62	151	294	623	1396

Flowmeter weight range:		1	2	3	4	5	Additional info
Materials		Range					
Version with aluminium connection box	titanium:	2...5%	1...2%	> 1%	< 0.5%	< 0.5%	Transducer (sensor) housing)
	steel:	91%	97%	98%	99%	> 99%	
	aluminum:	4...5%	1...2%	> 1%	< 0.5%	< 0.5%	Connection box
Version with stainless steel connection box	titanium:	2...5%	1...2%	> 1%	< 0.5%	< 0.5%	Transducer (sensor) housing)
	steel:	96%	97%	98%	99%	> 99%	Stainless steel connection box
	aluminum:	negligible (< 0.5%)					
Weight%;	plastic parts:	negligible (< 0.5%)					
	electronics:	negligible (< 0.5%)					

See the following chapters for information concerning the signal converter data.

CAUTION!

- *Wear personal protective equipment.*
- *Make sure that you use a stable workplace/bench to do the disassembly actions.*

INFORMATION!

The device has to be de-installed from the piping-circuit and cleaned properly before disassembling is possible.The device does not have a battery (or circuit board cell) inside and the printed circuit board material used, contains a minimal weight percentage of brominated flame retardants. The device is RoHS compliant.

INFORMATION!

Before disassembling the device, make sure you have the proper tools needed:

- *Allen key set*
- *Torx screwdriver set*
- *Pozidriv screwdriver set*
- *Adjustable wrench or wrench set (e.g. 10-27 mm)*
- *(Adjustable) 2-pin spanner and transducer removal toolkit*

There are no special guidance or actions necessary to disassemble the device.

7.6 Remove the connection and/or other cable(s)

DANGER!
The device MUST be disconnected from mains power before disassembling.

Connection cable materials consist of (several) metal conductor (usually copper), surrounded with a flexible plastic insulation.

Signal cables can be made from coaxial cables consisting of a one or two copper conductor(s) with a metal tabular shielding and surrounded with one or more insulation layer(s).

For more details refer to *Connection of signal cable to signal converter (remote version only)* on page 29.

Disconnect cable from the sensor

- The signal cable can be removed by opening the connection box on the sensor and unplugging the cable(s) from the terminal plate inside. The cable can then be pulled out after unscrewing the cable gland.

Disconnect cable from signal converter

Depending on the version of the signal converter the cable can be disconnected in the terminal compartment of the housing. For more details, refer to *Connection of signal cable to signal converter (remote version only)* on page 29.

- **Field (remote) version**: unscrew the cover of the sensor terminal compartment
- Loosen the grounding clamps
- Disconnect all cables from terminals
- Dismount the cable glands and pull the wiring out of the housing

Reuse of cables and connectors

Electrical signal cables can be reused when there is no damage (breakage or visible damage traces) on the outer cable. The terminal cable connectors (both male and female) can be replaced when fitting to each other is not sufficient anymore. Replacement of transducers is possible, please contact support center and/or refer to *Service* on page 97.

Material (or material code)	Weight		Additional information
	[kg]	[lb]	
Connectors (copper)	negligible		2 cable glands per measuring set (option; cable box 3 cable glands) min: 0.06 kg / 1.33 lb max: 0.15 kg / 3.31 lb
Cable gland (nickel-plated copper)	0.03	0.067	
Standard cable: plastics/copper/steel mixture	0.8	1.76	approx. 6 m/18 ft standard cable (optionally cable lengths are possible up to 30 m / 100 ft)
			7 gram / 0.25 ounce copper per m/ft

7.7 Disassembling of the flowmeter (sensor)

The OPTISONIC 7300 flowmeter is available in many variants and the re-usable materials after disassembling is depending on size and version. The largest part of weight% of the materials used is usually stainless steel and/or carbon steel (or a similar metal alloy). The sensor contains 2 or 4 transducer elements which have a piezo element connected to a small terminal board (< 10 cm²) with a few SMD components casted in resin. The transducer (sensor) elements have a titanium or stainless steel housing. The respective wiring is lead trough pipes and is connected inside the connection box on top of the flowmeter body.

The total amount of weight of the used materials mentioned (copper, PC board, PU/PP etc.), in relation to the total content of the metal of the sensor, will be very small and negligible.

For an estimate of material and weight% refer to *Dimensions and weight* on page 125 and/or the weight table refer to *Disassembly and recycling* on page 99

For details or additional information concerning specific data of the used materials of the flowmeter contact the support center.

Overview

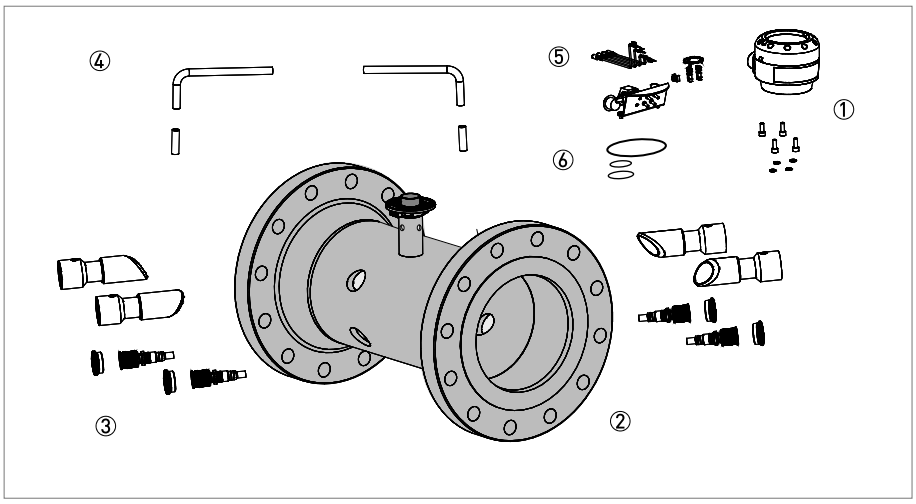

Figure 7-1: Disassembled device, remote (field) version

① Connection box (stainless steel / aluminium)
② Flowmeter housing
③ Transducer housing and sensors (2...4 x)
④ Cable tubes
⑤ Wire, connection parts, cable
⑥ Rubber sealing ring

The flowmeter is completely welded and only the transducers and connection box can be removed.

Remove the connection box

- Disconnect the wire(s) in the connection box.
- Unscrew the Allen bolts from the connection box and remove it from the flowmeter.

Remove the transducer units

- Remove (for each unit separate) the bolts on the flange connections and remove the complete transducer unit.

A special toolkit is necessary to remove the titanium transducers.
For additional information and detailed descriptions on materials used and how to remove the transducer sensors from their housing, contact the support center.

Disassembling the transducer sensors

- Open the transducer housings by unscrewing the caps with the 2-pin wrench.
- Disconnect the wire from the transducer sensor.
- Unscrew the bolt which secures the transducer sensor.
- Pull (or push from inside) out the transducer sensor and their respective wiring.

7.8 Overview of the materials and components of the flowmeter sensor

The items mentioned in the listing below are the main parts of the device. Consult our product support service for full and detailed description of the materials and components.

The OPTISONIC 7000 flowmeter can be ordered in different versions. The next tables show the data of the standard versions, please contact our product support service for details of special versions with additional features.

Materials/components, which must be removed and treated separately

INFORMATION!
The device is RoHS compliant.
The OPTISONIC 7000 does not contain any electrical parts.
If wanted, the device can be disassembled fully. However, the content of plastics and metal mixtures other than (stainless) steel is below 1% of the total weight.

Material/components, which can disturb recycling processes

Material (or material code)	Weight		Additional information
	[kg]	[lb]	
Electrolyte capacitor, battery, LCD	-		not present
Copper, nickle plated brass	negligible (< 1%)		cable glands, connection terminals and transducer parts
Silicon, plastics, PU	negligible (< 1...3%)		cabling and housing of transducers

Beneficial material/components, useful for recycling

INFORMATION!
See for % and weight of material content the table ***Total weight of device*** *below.*

Stainless/carbon steel version

Material (or material code)	Weight% of total	Additional information
Stainless/carbon steel	> 91...98%	e.g. housing, cable tubes, fixing units
Titanium	2...5%	approx. 0.3 kg / pc
Aluminium	< 5% *	connection box (* depending one version)
Other	< 1%	negligible

7.9 Disassembling the signal converter

This section briefly describes the instructions of handling and disassembling the device when it has reached the end of its useful life (EOL) or is disposed of after usage. The information given is sufficient to gather the most important parts of the device (by the end-user) which can be used for recycling.

Detailed information needed by WEEE collection and/or dismantling centre and recycling operators (and companies) is available on request at the support centre.

The signal converter is available in different versions and variants. The housing of the device and its components inside are broadly used. Therefore this handbook describes the main, standard versions. Where available, additional data will be mentioned. For specific data concerning versions, please contact the support centre.

Product description and data/info:

Measuring device: Ultrasonic signal converter for flow measurement

Depending on version: (values ± 5%)		Type			
L x W x H:		Field version		Compact version	
		[mm]	[inch]	[mm]	[inch]
		205 x 300 x 277	8.1 x 11.8 x 10.9	205 x 260 x 155	8.1 x 10.2 x 6.1
Volume:		0.006 m³	370 inch³	0.0053 m³	325 inch³
Total weight:	Aluminium version	6.1 kg	13.5 lb	4.3 kg	9.48 lb
	Stainless steel version	13.5 kg	29.8 lb	9.8 kg	21.6 lb
Weight%; metal parts:		87%		89%	
Weight%; plastic parts:		5%		4%	
Weight%; electronics; PC boards		8%		7%	

INFORMATION!
The device has to be de-installed from the piping-circuit and cleaned properly before disassembling is possible.The device does not have a battery (or circuit board cell) inside and the printed circuit board material used, contains a minimal weight percentage of brominated flame retardants. The device is RoHS compliant.

DANGER!
The device MUST be disconnected from mains power before disassembling.

CAUTION!
- *Wear personal protective equipment.*
- *Make sure that you use a stable workplace/bench to do the disassembly actions.*

INFORMATION!
Before disassembling the device, make sure you have the proper tools needed:
- *Allen key set*
- *Torx screwdriver set*
- *Pozidriv screwdriver set*
- *Adjustable wrench or wrench set (e.g. 10-27 mm)*
- *(Adjustable) 2-pin spanner and transducer removal toolkit*

There are no special guidance or actions necessary to disassemble the device.

7.9.1 Aluminum or stainless steel C (compact) version

Disassembling the device

- Remove the covers (③ - ⑥) of the housing ① by unscrewing them.
  Non-standard versions can have interlocking heads screws which then have to be unscrewed first with 4 mm Allen key.
- Disconnect all electric cables from connection terminals (if still attached).
- Remove all the cable glands, (stopping) plug and plastic insert(s) of the housing.
- Remove the PC board with connection terminals and connectors ② (IFC 400 only).
- Remove the electronics insert and display ⑤ .
- Unscrew the backplane PC board ⑦ inside the housing, together with the terminal block (T20) and disconnect all the wiring from the terminal block.
- Remove both the plastic cable covers and backplane and push the cabling (cable gland) inside the housing ① and remove it then completely.

➲ All main parts are now disassembled and can be shipped separately for reuse and/or recycling.

Exploded view

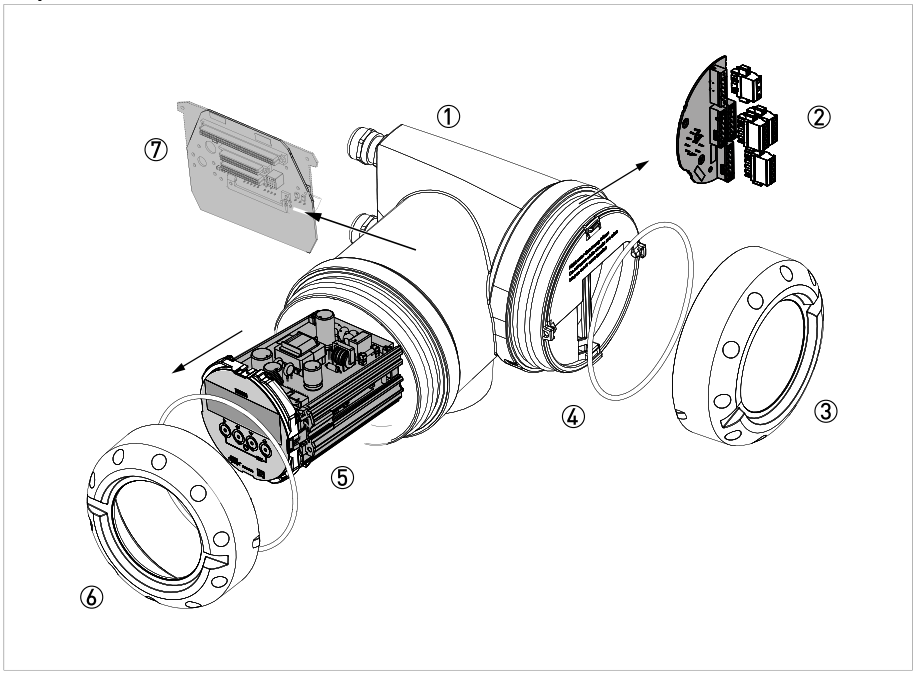

Figure 7-2: Disassembled compact device

① Signal converter housing
② PC board with terminals and connectors (only for IFC 400)
③ Cover of electric and I/O connections compartment
④ Plastic housing insert with rubber ring
⑤ Electronic insert with display unit
⑥ Cover of electronic insert/display compartment and rubber ring (depending on version; glass window)
⑦ Backplane PC board for connection inside the housing (varies per version ordered)

7.9.2 Aluminium or stainless steel F (remote) version

Disassembling the device

- Remove the covers (③ - ⑥) of the housing ⑧ by unscrewing them.
  Non-standard versions can have interlocking heads screws which then have to be unscrewed first with 4 mm Allen key.
- Disconnect all electric cables from connection terminals (if still attached).
- Remove all the cable glands, (stopping) plug and plastic insert(s) of the housing.
- Remove the PC board with connection terminals and connectors ① (IFC 400 only).
- Remove the electronics insert and display ⑤ .
- Unscrew the cable terminal in the console ④ and remove the terminal and cable.
- Unscrew the backplane PC board ⑦ inside the housing, together with the terminal block (T20) and disconnect all the wiring from the terminal block.
- Remove both the plastic cable covers and backplane and push the cabling (cable gland) inside the housing ⑧ and remove it then completely.
- By unscrewing of the four M10 bolts, the housing and console ④ can also be separated.

➲ All main parts are now disassembled and can be shipped separately for reuse and/or recycling.

Exploded view

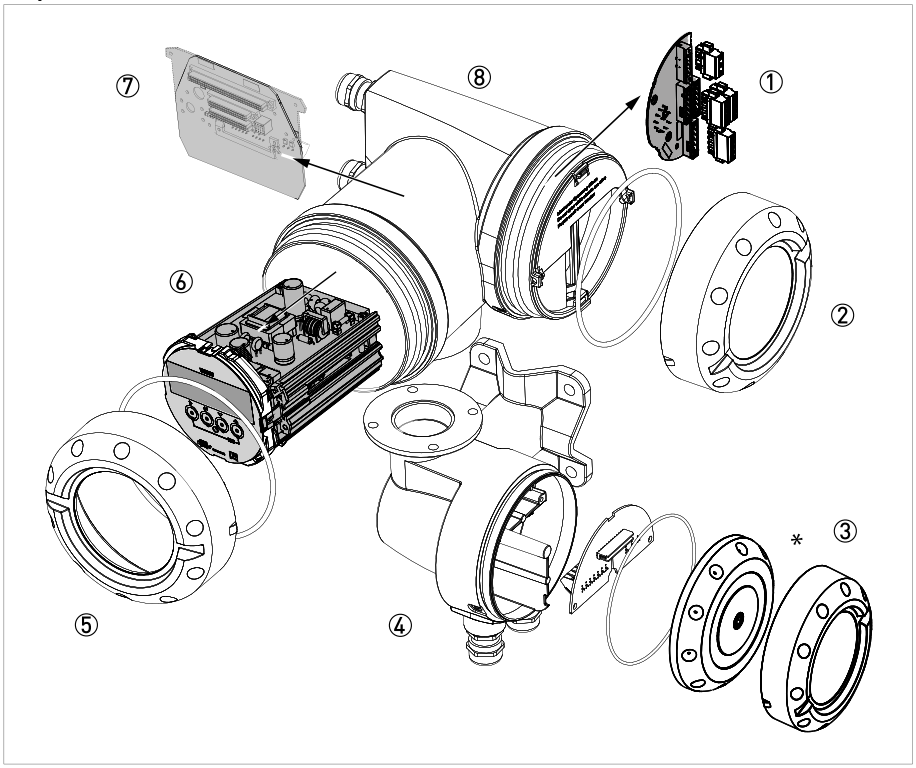

Figure 7-3: Disassembled field device

① PC board with terminals and connectors (only for IFC 400)
② Cover of electric and I/O connections compartment
③ Cover of sensor connections compartment (* "old" version with Allen bolt mount)
④ Console sensor connection part
⑤ Cover of electronic insert/display compartment (depending on version; glass window)
⑥ Electronic insert with display unit
⑦ Backplane PC board for connection inside the housing (varies per version ordered)
⑧ Signal converter housing

7.9.3 Overview of the converter materials and components

The items mentioned in the listing below are the main parts of the device.

The signal converter can be ordered in different versions. The next tables show the data of the normal (standard) versions in compact (C) and field (F) housing. Please contact our Support Service for details of special versions with additional features on I/O and/or Ex.

Materials/components, which must be removed and treated separately

Material (or material code)	Weight		Additional information
	[kg]	[lb]	
Printed circuit boards	0.64	1.4	Average size: 600 cm^2 / 9.8 $inch^2$ (± 5%)
Electrolyte capacitor	*	*	* The PC boards of the electronic insert contains totally 20 cm^3 of electrolytic capacitors (depending on I/O configuration)
Battery	**	**	** xFC 300/400 devices with HART7 button cell for real time clock, weight ~1 gram
LCD screen/glass	0.09	0.2	Screen size < 25 cm^2 The cover contains a glass screen 70 g / 0.16 lb
Plastics with brominated flame retardants	-	-	-
Noble/precious metal	-	-	-

Table 7-1: Signal converter in compact version

Material (or material code)	Weight		Additional information
	[kg]	[lb]	
Printed circuit boards	0.64	1.4	Average size: 600 cm^2 / 9.8 $inch^2$ (± 5%)
Electrolyte capacitor	*	*	* The PC boards of the electronic insert contains totally 20 cm^3 of electrolytic capacitors (depending on I/O configuration)
Battery	**	**	** xFC 300/400 devices with HART7 button cell for real time clock, weight ~1 gram
LCD screen/glass	0.09	0.2	Screen size < 25 cm^2 The cover contains a glass screen 70 g / 0.16 lb Note: for Ex versions ~300 g / 0.66 lb
Plastics with brominated flame retardants	-	-	-
Noble/precious metal	-	-	-

Table 7-2: Signal converter in field version

Material/components, which can disturb recycling processes

Material (or material code)	Weight		Additional information
	[kg]	[lb]	
Mixture ABS / steel	-	-	-
Metal mixture	0.09	0.20	e.g. bolts, washers, screws, cable clamp
Plastics mixture	-	-	-
Silicon / rubber	0.02	0.04	O-rings
PVC & connector parts	0.01	0.02	e.g. cabling and foils (display)
Copper, brass	0.024	0.053	Gold-plated connector, copper wire

Table 7-3: Signal converter in compact version

Material (or material code)	Weight		Additional information
	[kg]	[lb]	
Mixture ABS / steel	-	-	-
Metal mixture	0.111	0.244	e.g. bolts, washers, screws, cable clamp, terminal plate
Plastics mixture	-	-	-
Silicon / rubber	0.030	0.07	O-rings
PVC & connector parts	0.013	0.03	e.g. cabling and foils (display)
Copper, brass and other	0.024	0.053	Gold-plated connector, copper wire

Table 7-4: Signal converter in field version

Beneficial material/components, useful for recycling

Material (or material code)	Weight		Additional information
	[kg]	[lb]	
Stainless steel	10.94 ①	24.12 ①	① Data only applicable for stainless steel housing (incl. covers)
Aluminium	3.6 ②	7.9 ②	② Data only applicable for aluminum housing (incl. covers)
Polyamide	0.36	0.79	Plastic screens and sections inside housing
Printed circuit boards	0.64	1.4	Separate electronic units
Cabling	*	*	All cables are detachable from the device
Ferrite	negligible		-
Copper, brass	negligible		-

Table 7-5: Signal converter in compact version

Material (or material code)	Weight		Additional information
	[kg]	[lb]	
Stainless steel	12.24 ①	27.0 ①	① Data only applicable for stainless steel housing (incl. covers)
Aluminium	4.8 ②	10.6 ②	② Data only applicable for aluminum housing (incl. covers)
Polyamide	0.36	0.79	Plastic screens and sections inside housing
Printed circuit boards	0.64	1.4	Separate electronic units
Cabling	*	*	All cables are detachable from the device
Ferrite	negligible		-
Copper, brass	negligible		-

Table 7-6: Signal converter in field version

8.1 Measuring principle

- Like canoes crossing a river, acoustic signals are transmitted and received along a diagonal measuring path.
- A sound wave going downstream with the flow travels faster than a sound wave going upstream against the flow.
- The difference in-transit time is directly proportional to the mean flow velocity of the medium.

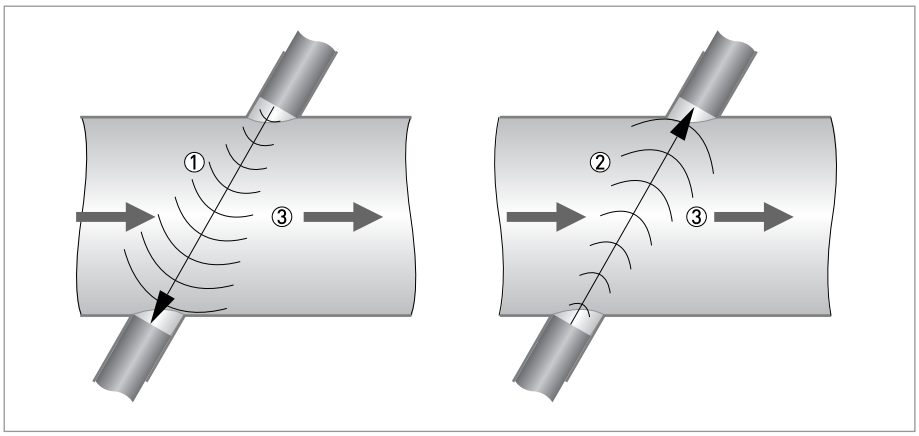

Figure 8-1: Measuring principle

① Sound wave against the flow direction
② Sound wave with the flow direction
③ Flow direction

8.2 Technical data

INFORMATION!

- *The following data is provided for general applications. If you require data that is more relevant to your specific application, please contact us or your local sales office.*
- *Additional information (certificates, special tools, software,...) and complete product documentation can be downloaded free of charge from the website (Downloadcenter).*

Measuring system

Measuring principle	Ultrasonic transit time
Application range	Flow measurement of process gases
Measured value	
Primary measured value	Transit time
Secondary measured values	Volume flow, corrected volume flow, mass flow, molar mass, flow speed, flow direction, velocity of sound, gain, signal to noise ratio, reliability of flow measurement, totalised volume or mass, methane fraction.

Design

Features	1 or 2 parallel acoustic path(s), fully welded flow sensor with O-ring fitted transducers.
Modular construction	The measuring system consists of a flow sensor and a signal converter.
Compact version	OPTISONIC 7300 C
Remote version	OPTISONIC 7000 F flow sensor with GFC 300 signal converter
Nominal diameter	1 path: DN50...80 / 2...3"
	2 paths: DN100...600 / 4...24"
	Larger diameters on request.
Measuring range	0.3... 30 m/s / 1... 100 ft/s (bi-directional)
Signal converter	
Outputs / inputs	Current output (including HART®), pulse output, frequency output and/or status output, limit switch and/or control input, current inputs (depending on the I/O version)
Counters	2 internal counters with a max. of 8 counter places (e.g. for counting volume and/or mass units).
Self diagnostics	Integrated verification, diagnostic functions: flowmeter, process, measured values, bargraph, device configuration, etc.
Communication interfaces	HART® , Foundation Fieldbus, Modbus RS 485

Display and user interface	
Graphic display	LC display, backlit white.
	Size: 128 x 64 pixels, corresponds to 59 x 31 mm = 2.32" x 1.22"
	Display can be rotated in 90° increments.
	Ambient temperatures below -25°C / -13°F, may affect the readability of the display.
Operating elements	4 optical buttons for operator control of the signal converter without opening the housing.
	Infrared interface for reading and writing all parameters with IR interface (option) without opening the housing.
Remote control	PACTware™ (including Device Type Manager (DTM))
	HART® Hand Held Communicator from Emerson Process
	AMS® from Emerson Process
	PDM® from Siemens
	All DTMs and drivers are available free of charge from the manufacturer's website.
Display functions	
Operating menu	Setting the parameters using 2 measured value pages, 1 status page, 1 graphics page (measured values and graphics are freely adjustable)
Language of display texts	English, French, German, Russian
Measurement functions	**Units:** Metric, British and US units selectable as desired from lists for volume/mass flow and counting, velocity, temperature
	Measured values: volume flow, corrected volume flow, mass flow, flow speed, velocity of sound, gain, signal to noise ratio, flow direction, diagnostics

Measuring accuracy

Dry calibration (standard)	DN100...600 / 4...24": < ± 2% of actual measured flow rate, for 1...30 m/s (3...100 ft/s) < ± 20 mm/s for 0.3...1 m/s (1...3 ft/s)
	DN50...80 / 2...3": < ± 3% of actual measured flow rate, for 1...30 m/s (3...100 ft/s) < ± 30 mm/s for 0.3...1 m/s (1...3 ft/s)
Air calibration (option)	
Reference conditions	Medium: Air
	Temperature: +20°C / +68°F
	Pressure: 1 bara / 14.5 psia
	Reynold > 10000
	Inlet section: 20 DN (for ≤ DN80 / 3"); 10 DN (for ≥ DN100 / 4")
Maximum measuring error	DN100...600 / 4...24": < ± 1% of actual measured flow rate, for 1...30 m/s (3...100 ft/s) < ± 10 mm/s for 0.3...1 m/s (1...3 ft/s)
	DN50...80 / 2...3": < ± 1.5% of actual measured flow rate, for 1...30 m/s (3...100 ft/s) < ± 15 mm/s for 0.3...1 m/s (1...3 ft/s)
Repeatability	1 path: ± 0.3%; 2 paths: ± 0.2%

Operating conditions

Temperature	
Process temperature	Compact version: -40...+125°C / -40...+257°F -40...+180°C / -40...+356°F, max. ambient temperature: 40°C / 104°F
	Remote version: -40...+180°C / -40...+356°F, for Ex versions max. ambient temperature may be derated, see Ex manual for details
Carbon steel flanges according to EN 1092-1, min. process temperature: -10°C / +14°F	
Carbon steel flanges according to ASME, min. process temperature: -29°C / -20°F	
FFKM transducer O-rings, min. process temperature: -20°C / -4°F	
Ambient temperature	Flow sensor: -40...+70°C / -40...+158°F
	Converter with aluminum housing: -40...+65°C / -40...+149°F
	Converter with a stainless steel housing: -40...+60°C / -40...+131°F
	Ambient temperatures below -25°C / -13°F may affect the readability of the display.
Protect the signal converter from external heat sources such as direct sunlight, as higher temperatures reduce the life cycle of all electronic components.	
Storage temperature	-50...+70°C / -58...+158°F
Pressure	
All sensor designs at full rating according to below flange standards for standard materials.	
Max. pressure limited by transducer	Titanium G7.01: 150 barg / 2175 psia
	Titanium G7.04: 100 barg / 1465 psia
	Duplex/composite G6.01: 431 barg / 6266 psia
	Duplex/composite G6.02: 270 barg / 3930 psia
	Inconel 625, grade 1 G11.04: 75 barg / 1102 psia
EN 1092-1	DN50...80: PN 40
	DN100...150: PN 16
	DN200...600: PN 10
	Larger diameters and higher pressures on request (up to DN1000: PN 420).
ASME B16.5	2...24": 150 lb RF
	2...24": 300 lb RF
	2...24": 600 lb RF
	2...14": 900 lb RF
	Larger diameters and higher pressure ratings on request (up to 40": 2500 lb).
Properties of medium (other properties on request)	
Physical condition	Process gas, single phase
Density	Standard: 10...45 g/mol/ 1...150 kg/m^3 / 0.062...9.36 lb/ft^3
	Extended (may impose limitations on other specifications): 2...80 g/mol / 0.2...250 kg/m^3 / 0.012...15.6 lb/ft^3

Installation conditions

Installation	For detailed information refer to *Installation* on page 18.
Inlet section (minimum)	DN50...80 / 2...3", 1 path: 20 DN (straight inlet)
	DN100...600 / 4...24", 2 paths: 10 DN (straight inlet)
	Larger in and outlet section will improve the stability of the measurement.
Outlet section	Minimal 3 DN (straight outlet)
Dimensions and weight	For detailed information refer to *Dimensions and weight* on page 125.

Materials

Flow sensor	
Flanges (wetted)	Standard: carbon steel ASTM A105 N
	Option: stainless steel AISI 316 L, carbon steel A350 LF2
	Other materials on request.
Measuring tube (wetted)	Standard: carbon steel ASTM A106 Gr. B or equivalent
	Option: stainless steel AISI 316 L, carbon steel A333 Gr. 6
	Other materials on request.
Sensor conduits	Stainless steel AISI 316 L / 1.4404
Sensor neck	Stainless steel AISI 316 / 1.4408
Transducer nozzles (wetted)	Stainless steel AISI 316 L / 1.4404
Transducer holders (wetted), incl. caps	Stainless steel AISI 316 L / 1.4404
Transducers (wetted)	Standard: titanium grade 29
	Option: Inconel 625 / Duplex composiet
Transducer O-rings (wetted)	Standard: FKM / FPM
	Option: FFKM / Aflas
Connection box (remote version only)	Standard: die-cast aluminium, standard coated (stainless steel for Ex version)
	Option: stainless steel AISI 316 / 1.4408
Coating (flow sensor)	Standard coating
	Option: Offshore coating
NACE conformity	For standard range, all wetted materials are conform NACE MR0175.
Signal converter	
Housing	Compact version: housing in aluminium or stainless steel 316 / 1.4408
	Remote version: housing in aluminium or stainless steel 316 / 1.4408
	Console: stainless steel 316 / 1.4408
Coating (converter housing)	Standard coating

Electrical connections

General	Electrical connection is carried out in conformity with the VDE 0100 directive "Regulations for electrical power installations with line voltages up to 1000 V" or equivalent national specifications.
Power supply	Standard: 100...230 VAC (-15% / +10%), 50/60 Hz
	Option: 24 VDC (-55% / +30%) 24 VAC/DC (AC: -15% / +10%; DC: -25% / +30%)
Power consumption	AC: 22 VA
	DC: 12 W
Signal cable (remote version only)	Shielded cable with 2 triax cores, 1 cable per path: Ø 10.6 mm / 0.4"
	Class 1 Div1/2: single coax cables for fitting in conduit (2 per acoustic path)
	5 m / 16 ft
	Option: 10...30 m / 33...98 ft
Cable entries	Standard: M20 x 1.5
	Option: adapters for 1/2 NPT, PF 1/2 adapter

Inputs and outputs

General	All in-and outputs are galvanically isolated from each other and from all other circuits.		
	All operating data and output values can be adjusted.		
Description of used abbreviations	V_{ext} = external voltage; R_L = load + resistance; V_0 = terminal voltage; I_{nom} = nominal current Safety limit values (Ex i): V_i = max. input voltage; I_i = max. input current; P_i = max. input power rating; C_i = max. input capacity; L_i = max. input inductivity		
Current output			
Output data	Measurement of volume flow, corr. volume flow, mass flow, molar mass, flow speed, velocity of sound, gain, diagnostics 1, 2, 3, HART® communication.		
Temperature coefficient	Typically ± 30 ppm/K		
Settings	**Without HART®**		
	Q = 0%: 0...15 mA		
	Q = 100%: 10...20 mA		
	Error identification: 3...22 mA		
	With HART®		
	Q = 0%: 4...15 mA		
	Q = 100%: 10...20 mA		
	Error identification: 3.5...22 mA		
Operating data	**Basic I/Os**	**Modular I/Os**	**Ex i I/Os**
Active	$V_{int, nom}$ = 24 VDC I ≤ 22 mA R_L ≤ 1 kΩ		$V_{int, nom}$ = 20 VDC I ≤ 22 mA R_L ≤ 450 Ω
			V_0 = 21 V I_0 = 90 mA P_0 = 0.5 W C_0 = 90 nF / L_0 = 2 mH C_0 = 110 nF / L_0 = 0.5 mH Linear characteristics
Passive	V_{ext} ≤ 32 VDC I ≤ 22 mA V_0 ≥ 1.8 V R_L ≤ (V_{ext} - V_0) / I_{max}		V_{ext} ≤ 32 VDC I ≤ 22 mA V_0 ≥ 4 V R_L ≤ (V_{ext} - V_0) / I_{max}
			V_i = 30 V I_i = 100 mA P_i = 1 W C_i = 10 nF L_i ~ 0 mH

HART®			
Description	HART® protocol via active and passive current output		
	HART® version:		
	Universal HART® parameter: completely integrated		
Load	≥ 230 Ω at HART® test point; Note maximum load for current output!		
Multi-Drop operation	Yes, current output = 4 mA		
	Multi-Drop address adjustable in operation menu 1...15		
Device drivers	Available for FC 375/475, AMS, PDM, FDT/DTM		
Pulse output or frequency output			
Output data	Volume flow, corr. volume flow, mass flow		
Function	Adjustable as pulse of frequency output		
Pulse rate/frequency	Adjustable final value: 0.01...10000 pulse/s or Hz		
Settings	Pulses per volume or mass unit or max. frequency for 100% flow		
	Pulse width: setting automatic, symmetric or fixed (0.05...2000 ms)		
Operating data	**Basic I/Os**	**Modular I/Os**	**Ex i I/Os**
Active	-	V_{nom} = 24 VDC	-
		f_{max} in operating menu set to f_{max} ≤ 100 Hz: I ≤ 20 mA open: I ≤ 0.05 mA closed: $V_{0, nom}$ = 24 V at I = 20 mA	
		f_{max} in operating menu set to 100 Hz < f_{max} ≤ 10 kHz: I ≤ 20 mA open: I ≤ 0.05 mA closed: $V_{0, nom}$ = 22.5 V at I = 1 mA $V_{0, nom}$ = 21.5 V at I = 10 mA $V_{0, nom}$ = 19 V at I = 20 mA	

Passive	$V_{ext} \leq 32$ VDC		-
	f_{max} in operating menu set to $f_{max} \leq 100$ Hz: $I \leq 100$ mA $R_{L, max} = 47$ kΩ $R_{L, min} = (V_{ext} - V_0) / I_{max}$ open: $I \leq 0.05$ mA at $U_{ext} = 32$ VDC closed: $V_{0, max} = 0.2$ V at $I \leq 10$ mA $V_{0, max} = 2$ V at $I \leq 100$ mA		
	f_{max} in operating menu set to $100 \text{ Hz} < f_{max} \leq 10$ kHz: $I \leq 20$ mA $R_{L, max} = 47$ kΩ $R_{L, min} = (V_{ext} - V_0) / I_{max}$ open: $I \leq 0.05$ mA at $U_{ext} = 32$ VDC closed: $V_{0, max} = 1.5$ V at $I \leq 1$ mA $V_{0, max} = 2.5$ V at $I \leq 10$ mA $V_{0, max} = 5.0$ V at $I \leq 20$ mA		
NAMUR	-	Passive to EN 60947-5-6 open: $I_{nom} = 0.6$ mA closed: $I_{nom} = 3.8$ mA	Passive to EN 60947-5-6 open: $I_{nom} = 0.43$ mA closed: $I_{nom} = 4.5$ mA
			$V_i = 30$ V $I_i = 100$ mA $P_i = 1$ W $C_i = 10$ nF $L_i \sim 0$ mH

Status output / limit switch			
Function and settings	Adjustable as automatic measuring range conversion, display of flow direction, overflow, error, switching point		
	Valve control with activated dosing function		
Operating data	**Basic I/Os**	**Modular I/Os**	**Ex i I/Os**
Active	-	V_{int} = 24 VDC I ≤ 20 mA open: I ≤ 0.05 mA closed: $V_{0, nom}$ = 24 V at I = 20 mA	-
Passive	V_{ext} ≤ 32 VDC I ≤ 100 mA $R_{L, max}$ = 47 kΩ $R_{L, min} = (V_{ext} - V_0) / I_{max}$ open: I ≤ 0.05 mA at V_{ext} = 32 VDC closed: $V_{0, max}$ = 0.2 V at I ≤ 10 mA $V_{0, max}$ = 2 V at I ≤ 100 mA	V_{ext} = 32 VDC I ≤ 100 mA $R_{L, max}$ = 47 kΩ $R_{L, min} = (V_{ext} - V_0) / I_{max}$ open: I ≤ 0.05 mA at V_{ext} = 32 VDC closed: $V_{0, max}$ = 0.2 V at I ≤ 10 mA $V_{0, max}$ = 2 V at I ≤ 100 mA	-
NAMUR	-	Passive to EN 60947-5-6 open: I_{nom} = 0.6 mA closed: I_{nom} = 3.8 mA	Passive to EN 60947-5-6 open: I_{nom} = 0.43 mA closed: I_{nom} = 4.5 mA V_i = 30 V I_i = 100 mA P_i = 1 W C_i = 10 nF L_i = 0 mH

Control input			
Function	Hold value of the outputs (e.g. for cleaning work), set value of the outputs to "zero", counter and error reset, stop counter, range conversion, zero calibration		
	Start of dosing when dosing function is activated.		
Operating data	**Basic I/Os**	**Modular I/Os**	**Ex i I/Os**
Active	-	V_{int} = 24 VDC Ext. contact open: $V_{0, nom}$ = 22 V Ext. contact closed: I_{nom} = 4 mA Contact closed (on): $V_0 \geq$ 12 V at I_{nom} = 1.9 mA Contact open (off): $V_0 \leq$ 10 V at I_{nom} = 1.9 mA	-
Passive	8 V $\leq V_{ext} \leq$ 32 VDC I_{max} = 6.5 mA at $V_{ext} \leq$ 24 VDC I_{max} = 8.2 mA at $V_{ext} \leq$ 32 VDC Contact closed (on): $V_0 \geq$ 8 V at I_{nom} = 2.8 mA Contact open (off): $V_0 \leq$ 2.5 V at I_{nom} = 0.4 mA	3 V $\leq V_{ext} \leq$ 32 VDC I_{max} = 9.5 mA at $V_{ext} \leq$ 24 V I_{max} = 9.5 mA at $V_{ext} \leq$ 32 V Contact closed (on): $V_0 \geq$ 3 V at I_{nom} = 1.9 mA Contact open (off): $V_0 \leq$ 2.5 V at I_{nom} = 1.9 mA	$V_{ext} \leq$ 32 VDC I $\leq$ 6 mA at V_{ext} = 24 V I $\leq$ 6.6 mA at V_{ext} = 32 V On: $V_0 \geq$ 5.5 V at I $\geq$ 4 mA Off: $V_0 \leq$ 3.5 V at I $\leq$ 0.5 mA V_i = 30 V I_i = 100 mA P_i = 1 W C_i = 10 nF L_i = 0 mH
NAMUR	-	Active to EN 60947-5-6 Terminals open: $V_{0, nom}$ = 8.7 V Contact closed (on): $V_{0, nom}$ = 6.3 V at I_{nom} > 1.9 mA Contact open (off): $V_{0, nom}$ = 6.3 V at I_{nom} < 1.9 mA Detection for open terminals: $V_0 \geq$ 8.1 V at I $\leq$ 0.1 mA Detection of cable short circuit: $V_0 \leq$ 1.2 V at I $\geq$ 6.7 mA	-

Current input (Modular I/O)			
Function	A connected external sensor delivers the values (temperature, pressure or current) to the current input.		
Operating data	**Basic I/Os**	**Modular I/Os**	**Ex i I/Os**
Active	-	$V_{int, nom}$ = 24 VDC I ≤ 22 mA I_{max} ≤ 26 mA (electronically limited) $V_{0, min}$ = 19 V at I ≤ 22 mA No HART®	V_{int} = 20 VDC I ≤ 22 mA $V_{0, min}$ = 14 V at I ≤ 22 mA No HART®
			V_0 = 24.1 V I_0 = 99 mA P_0 = 0.6 W C_0 = 75 nF / L_0 = 0.5 mH No HART®
Passive	-	V_{ext} ≤ 32 VDC I ≤ 22 mA I_{max} ≤ 26 mA (electronically limited) $V_{0, max}$ = 5 V at I ≤ 22 mA No HART®	V_{ext} ≤ 32 VDC I ≤ 22 mA $V_{0, max}$ = 4 V at I ≤ 22 mA No HART®
			V_i = 30 V I_i = 100 mA P_i = 1 W C_i = 10 nF L_i = 0 mH No HART®
Current input (Ex i I/O)			
Function	A connected external sensor delivers the values (temperature, pressure or current) to the current input.		
Operating data	**Basic I/Os**	**Modular I/Os**	**Ex i I/Os**
Active	-	-	V_{int} = 20 VDC I ≤ 22 mA $V_{0, min}$ = 14 V at I ≤ 22 mA No HART®
			V_0 = 24.1 V I_0 = 99 mA P_0 = 0.6 W C_0 = 45 nF / 110 nF L_0 = 2.0 mH / 0.2 mH No HART®

FOUNDATION Fieldbus	
Description	Galvanically isolated according to IEC 61158
	Current consumption: 10.5 mA
	Permissible bus voltage: 9...32 V; in Ex application: 9...24 V
	Bus interface with integrated reverse polarity protection
	Link Master function (LM) supported
	Tested with Interoperable Test Kit (ITK) version 5.2
Function blocks	6 x analogue input (AI), 2 x integrator, 1 x PID, 1 x arithmetic
Output data	Volume flow, corr. volume flow, mass flow, molar mass, enthalpy flow, spec. enthalpy, density, flow speed, process temperature, process pressure, electronic temperature, velocity of sound (av.), gain (av.), SNR (av.), velocity of sound 1-3, gain 1-3, SNR 1-3
Modbus	
Description	Modbus RTU, Master / Slave, RS485
Address range	1...247
Supported function codes	01, 03, 04, 05, 08, 16, 43
Supported Baud rate	1200, 2400, 4800, 9600, 19200, 38400, 57600, 115200 Baud

Approvals and certificates

CE

This device fulfils the statutory requirements of the relevant directives.The manufacturer certifies successful testing of the product by applying the conformity mark on the device.	
	For more information on the directives, standards and the approved certifications, please refer to the declaration of conformity supplied with the device or downloadable from the manufacturer's website.
Hazardous areas	
Non-Ex	Standard
Ex zone 1 - 2	For detailed information, please refer to the relevant Ex documentation.
	According to European directive 2014/34/EU / UK-Regulation 2016 No. 1107
IECEx	OPTISONIC 7300 C: IECEx KIWA 18.0004X
	OPTISONIC 7000 F: IECEx KIWA 18.0004X and GFC 300 F: IECEx KIWA 17.0001X
ATEX	OPTISONIC 7300 C: KIWA 18ATEX0005X
	OPTISONIC 7000 F: KIWA 18ATEX0005X and GFC 300 F: KIWA 17ATEX0002X
Class 1, Division 1/2	cQPSus LR 1338-6R1 / LR 1338-11
NEPSI	OPTISONIC 7300 C: GYJ181424X
	OPTISONIC 7000 F / GFC 300: GYJ181425X
Other standards and approvals	
Ingress protection according to IEC 60529	**Signal converter**
	Compact version (C): IP66/67, NEMA 4X/6
	Field version (F): IP66/67, NEMA 4X/6
	All flow sensors
	IP66/67, NEMA 4/4X/6
NAMUR	NE 21, NE 43, NE 53, NE 80
Shock resistance	IEC 60068-2-27
	f = 20...2000 Hz, rms = 30g, t = 18min
Vibration resistance	IEC 60068-2-64; 1g up to 2000 Hz
	IEC 60721; 10g

8.3 Dimensions and weight

Remote version	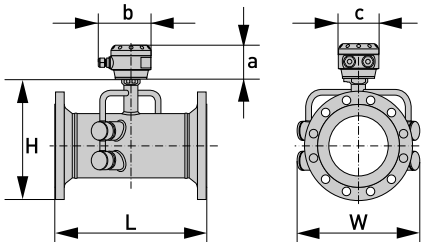	a = 88 mm / 3.5" b = 139 mm / 5.5" ① c = 106 mm / 4.2"
Compact version	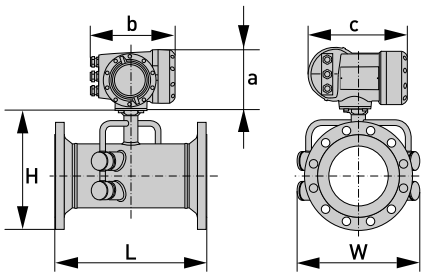	a = 155 mm / 6.1" b = 230 mm / 9.1" ① c = 260 mm / 10.2" Total height = H + a

Table 8-1: Dimension and weight

① The value may vary depending on the used cable glands.

8.3.1 Flow sensor in carbon steel

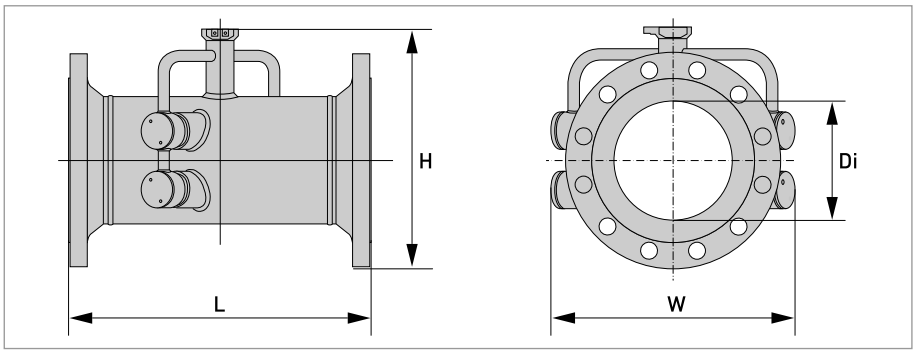

Figure 8-2: Dimensions of flow sensor

EN 1092-1

Nominal size		Dimensions [mm]				Approx. weight [kg]
DN	PN [bar]	L	H	W	Di ①	
200	PN 10	460	368	429	207	46
250	PN 10	530	423	474	261	66
300	PN 10	580	473	517	310	81
350	PN 10	610	519	542	341	109
400	PN 10	640	575	583	392	141
450	PN 10	620	625	623	442	170
500	PN 10	670	678	670	493	202
600	PN 10	790	784	780	593	278

Table 8-2: Dimensions and weight in mm and kg

① Di = inner diameter at flange face. Inner tube diameter may be smaller.

PN 16

Nominal size		Dimensions [mm]				Approx. weight [kg]
DN	PN [bar]	L	H	W	Di ①	
100	PN 16	490	254	337	107	24
125	PN 16	520	283	359	133	32
150	PN 16	540	315	387	159	35

Table 8-3: Dimensions and weight in mm and kg

① Di = inner diameter at flange face. Inner tube diameter may be smaller.

PN 40

Nominal size		Dimensions [mm]				Approx. weight [kg]
DN	PN [bar]	L	H	W	Di ①	
50	PN 40	320	196	300	54.5	11
65	PN 40	350	216	313	70.3	14
80	PN 40	480	230	324	82.5	19

Table 8-4: Dimensions and weight in mm and kg

① Di = inner diameter at flange face. Inner tube diameter may be smaller.

ASME 150 lb

Nominal size	Dimensions								Approx. weight	
	L		H		W		Di ①			
	[inch]	[mm]	[inch]	[mm]	[inch]	[mm]	[inch]	[mm]	[lb]	[kg]
2"	14.2	360	7.5	190	11.8	300	2.1	53	22	10
2½"	15.0	380	8.3	210	12.2	310	2.5	63	33	15
3"	20.5	520	8.9	226	12.8	324	3.1	78	44	20
4"	21.7	550	10.1	258	13.3	337	4.0	102	64	29
5"	23.2	590	11.2	285	14.1	364	5.1	128	84	38
6"	24.4	620	12.2	312	15.2	387	6.1	154	90	41
8"	21.2	540	14.5	369	16.9	429	8.1	206	130	59
10"	24.0	610	16.9	428	18.7	474	10.3	260	185	84
12"	26.4	670	19.4	492	20.4	512	12.2	311	266	121
14"	28.7	730	21.0	534	21.3	540	13.4	340	352	160
16"	30.3	770	23.3	591	23.5	597	15.4	391	462	210
18"	30.7	780	25.0	635	25.0	635	17.5	441	570	259
20"	32.7	830	27.3	693	27.5	699	19.3	489	607	304
24"	35.8	910	31.5	801	32.0	813	23.3	591	904	411

Table 8-5: Dimensions and weight in inch / mm and lb / kg

① Di = inner diameter at flange face. Inner tube diameter may be smaller.

ASME 300 lb

Nominal size	Dimensions								Approx. weight	
	L		H		W		Di ①			
	[inch]	[mm]	[inch]	[mm]	[inch]	[mm]	[inch]	[mm]	[lb]	[kg]
2"	15.0	380	7.7	196	11.8	300	2.1	53	27	12
2.5"	15.4	390	8.5	217	12.2	310	2.5	63	38	17
3"	21.3	540	9.3	235	12.8	324	3.1	78	53	24
4"	22.4	570	10.7	271	13.3	337	4.0	102	86	39
5"	24.0	610	11.7	298	14.1	364	5.1	128	115	52
6"	25.2	640	13.0	331	15.0	387	6.1	154	146	66
8"	22.0	560	15.3	388	16.6	429	8.0	203	207	94
10"	25.2	640	17.6	448	18.3	474	10.0	255	309	140
12"	28.0	710	20.1	511	20.5	521	11.9	303	452	205
14"	29.9	760	22.0	559	23.0	584	13.1	333	609	276
16"	31.9	810	24.3	616	25.5	648	15.0	381	785	356
18"	33.1	840	26.5	673	28.0	711	16.9	428	926	420
20"	36.6	930	28.8	731	30.5	775	18.8	478	1237	561
24"	38.2	970	33.5	851	36.0	914	22.6	575	1715	778

Table 8-6: Dimensions and weight in inch / mm and lb / kg

① Di = inner diameter at flange face. Inner tube diameter may be smaller.

ASME 600 lb

Nominal size	Dimensions								Approx. weight	
	L		H		W		Di ①			
	[inch]	[mm]	[inch]	[mm]	[inch]	[mm]	[inch]	[mm]	[lb]	[kg]
2"	15.7	400	7.7	196	11.5	300	1.9	49	33	15
2.5"	16.1	410	8.5	217	12.0	310	2.3	59	44	20
3"	22.0	560	9.3	235	12.5	324	2.9	74	66	30
4"	24.4	620	11.1	281	13.1	337	3.8	97	119	54
5"	26.0	660	12.7	323	14.1	359	4.8	122	183	83
6"	27.2	690	13.8	350	15.0	374	5.8	146	223	101
8"	24.4	620	16.1	408	16.5	421	7.6	194	333	151
10"	27.2	690	18.3	479	20.0	508	9.6	243	531	241
12"	28.3	720	20.9	530	22.0	559	11.4	289	655	297
14"	29.9	760	22.4	568	23.7	603	12.5	317	798	362
16"	32.7	830	25.0	635	27.0	686	14.3	364	1105	501
18"	34.6	880	27.1	689	29.3	743	16.1	409	1389	630
20"	35.4	900	29.5	750	32.0	813	17.9	456	1695	769
24"	38.2	970	34.0	864	37.0	640	21.6	548	2438	1106

Table 8-7: Dimensions and weight in inch / mm and lb / kg

① Di = inner diameter at flange face. Inner tube diameter may be smaller.

ASME 900 lb

Nominal size	Dimensions								Approx. weight	
	L		H		W		Di ①			
	[inch]	[mm]	[inch]	[mm]	[inch]	[mm]	[inch]	[mm]	[lb]	[kg]
2"	17.7	450	8.7	222	11.5	300	1.7	43	64	29
2.5"	18.1	460	9.6	244	12.0	310	2.3	59	86	39
3"	23.6	600	9.9	251	12.5	324	2.6	67	119	54
4"	26.8	640	11.4	290	13.0	337	3.4	87	157	71
5"	26.8	680	12.6	333	13.7	359	4.6	116	240	109
6"	28.7	730	14.3	363	15.0	381	5.5	140	335	152
8"	26.8	680	17.0	433	18.5	470	7.2	183	545	247
10"	29.9	760	19.6	498	21.5	546	9.1	230	838	380
12"	31.9	810	21.9	556	24.0	610	10.7	273	1168	530
14"	33.9	860	23.1	588	25.2	641	11.8	300	1382	627

Table 8-8: Dimensions and weight in inch / mm and lb / kg

① Di = inner diameter at flange face. Inner tube diameter may be smaller.

8.3.2 Signal converter housing

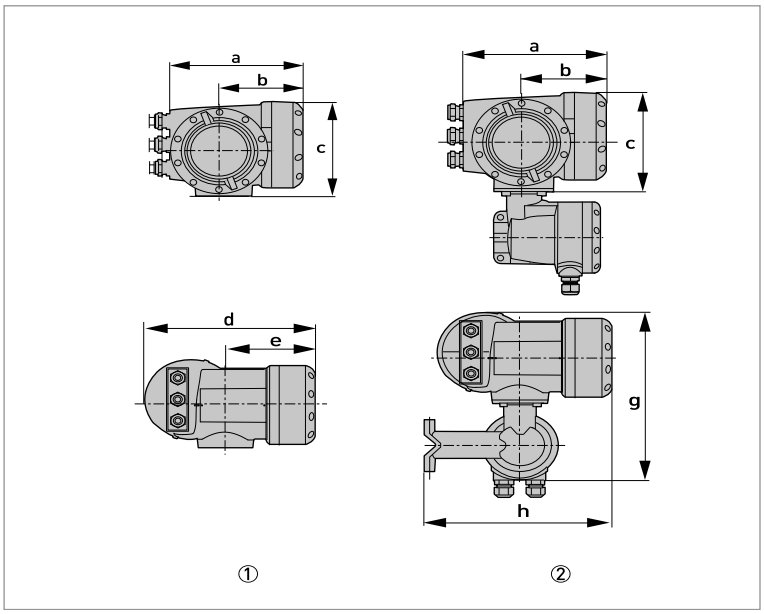

Figure 8-3: Dimensions of signal converter housing

① Compact version (C)
② Field housing (F) - remote version

Version	Dimensions [mm]							Weight [kg]
	a	b	c	d	e	g	h	
C	202	120	155	260	137	-	-	4.2
F	202	120	155	-	-	295.8	277	5.7

Table 8-9: Dimensions and weight in mm and kg

Version	Dimensions [inch]							Weight [lb]
	a	b	c	d	e	g	h	
C	7.75	4.75	6.10	10.20	5.40	-	-	9.30
F	7.75	4.75	6.10	-	-	11.60	10.90	12.60

Table 8-10: Dimensions and weight in inch and lb

INFORMATION!
The weight of a field stainless steel converter housing is 14 kg / 30.9 lb

8.3.3 Mounting plate of field housing

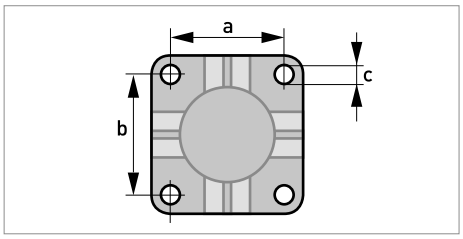

Figure 8-4: Dimensions for mounting plate of field housing

	[mm]	[inch]
a	72	2.8
b	72	2.8
c	Ø9	Ø0.4

Table 8-11: Dimensions in mm and inch

9.1 General description

The open HART® protocol, which can be used freely, is integrated into the signal converter for communication.

Devices which support the HART® protocol are classified as either operating devices or field devices. When it comes to operating devices (Master), both manual control units (Secondary Master) and PC-supported workstations (Primary Master) are used in, for example, a control centre.

HART® field devices include flow sensors, signal converters and actuators. The field devices range from 2-wire to 4-wire to intrinsically safe versions for use in hazardous areas.

The HART® data are superimposed over the analogue 4...20 mA signal via FSK modem.
This way, all of the connected devices can communicate digitally with one another via the HART® protocol while simultaneously transmitting the analogue signals.

When it comes to the field devices and secondary masters, the FSK or HART® modem is integrated, whereas with a PC communication takes place via an external modem which must be connected to the serial interface. There are, however, other connection variants which can be seen in the following connection diagrams.

9.2 Software history

INFORMATION!
In the table below, "x" is a placeholder for possible multi-digit alphanumeric combinations, depending on the available version.

Release date	Electronic Revision	SW.REV.UIS	SW.REV.MS	HART®	
				Device Revision	DD Revision
2012-03		1.x.x	1.x.x	2	1

HART® identification codes and revision numbers

Manufacturer ID:	69 (0x0045)
Device:	0x45D5
Device Revision:	2
DD Revision	1
HART® Universal Revision:	5
FC 375/475 system SW.Rev.:	≥ 3.5 (HART App5)
AMS version:	≥ 11.1
PDM version:	≥ 6.0
FDM version:	≥ 4.10

9.3 Connection variants

The signal converter is a 4-wire device which is available in a variant with 4...20 mA current output and HART® interface.
Depending on the version, the settings and the wiring, the current output can operate as passive or active output.

- **Multi-drop mode is supported**
  In a multi-drop communication system, more than 2 devices are connected to a common transmission cable.
- **Burst mode is not supported**
  In the Burst mode a slave device transfers cyclic pre-defined response telegrams, to get a higher rate of data transfer.

INFORMATION!
For detailed information about the electrical connection of the signal converter for HART®, refer to the section "Electrical connection".

There are two ways of using the HART® communication:

- as Point-to-Point connection and
- as multi-drop connection, with 2-wire connection or
  as multi-drop connection, with 3-wire connection.

9.3.1 Point-to-Point connection - analogue / digital mode

Point-to-Point connection between the signal converter and the HART® Master.

The current output of the device may be active or passive.

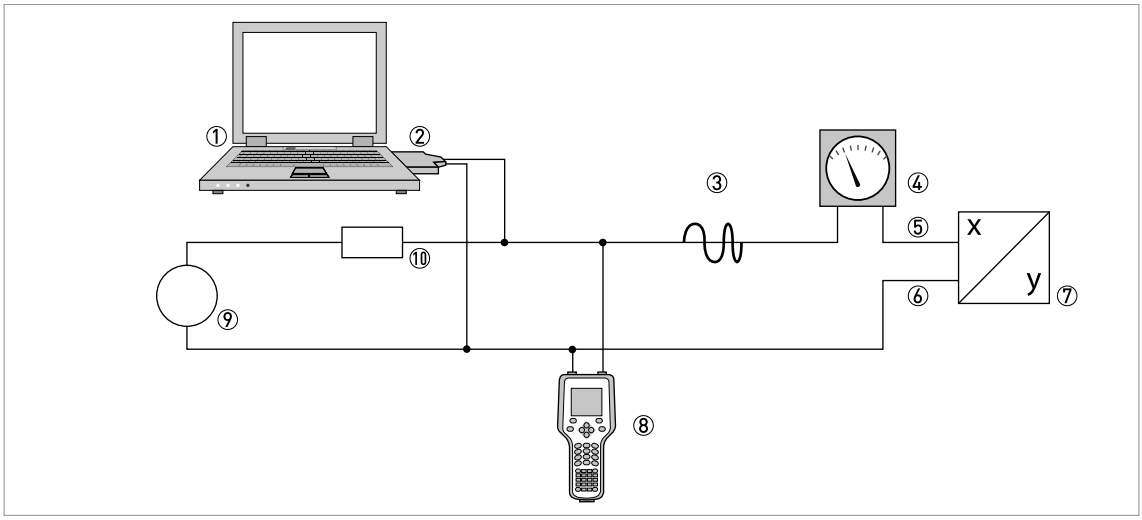

Figure 9-1: Point-to-Point connection

① Primary master
② FSK modem or HART® modem
③ HART® signal
④ Analog indication
⑤ Signal converter terminals A (C)
⑥ Signal converter terminals A- (C-)
⑦ Signal converter with address = 0 and passive or active current output
⑧ Secondary Master
⑨ Power supply for devices (slaves) with passive current output
①⓪ Load ≥ 230 Ω

9.3.2 Multi-drop connection (2-wire connection)

In the case of a multi-drop connection, up to 15 devices may be installed in parallel (this signal converter and other HART® devices).

The current outputs of the devices must be passive!

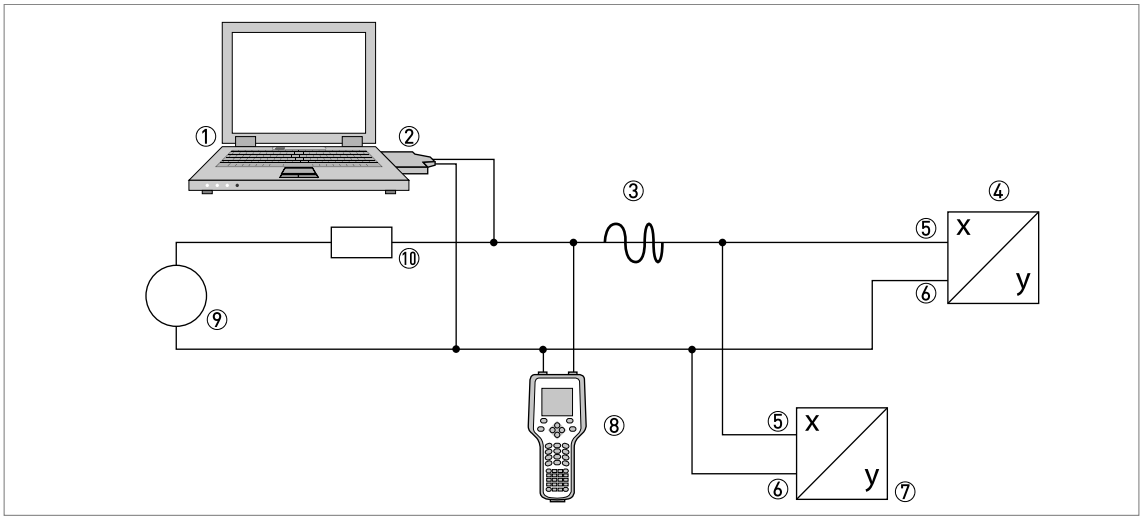

Figure 9-2: Multi-Drop connection (2-wire connection)

① Primary Master
② HART® modem
③ HART® signal
④ Other HART® devices or this signal converter (refer also to ⑦)
⑤ Signal converter terminals A (C)
⑥ Signal converter terminals A- (C-)
⑦ Signal converter with address ≥ 0 and passive current output, connection of max. 15 devices (slaves) with 4...20 mA
⑧ Secondary Master
⑨ Power supply
①⓪ Load ≥ 230 Ω

9.3.3 Multi-drop connection (3-wire connection)

Connection of 2-wire and 4-wire devices in the same network. In order that the current output of the signal converter is working continuously active, an additional third wire must be connected to the devices in the same network. These devices must be powered via a 2-wire loop.

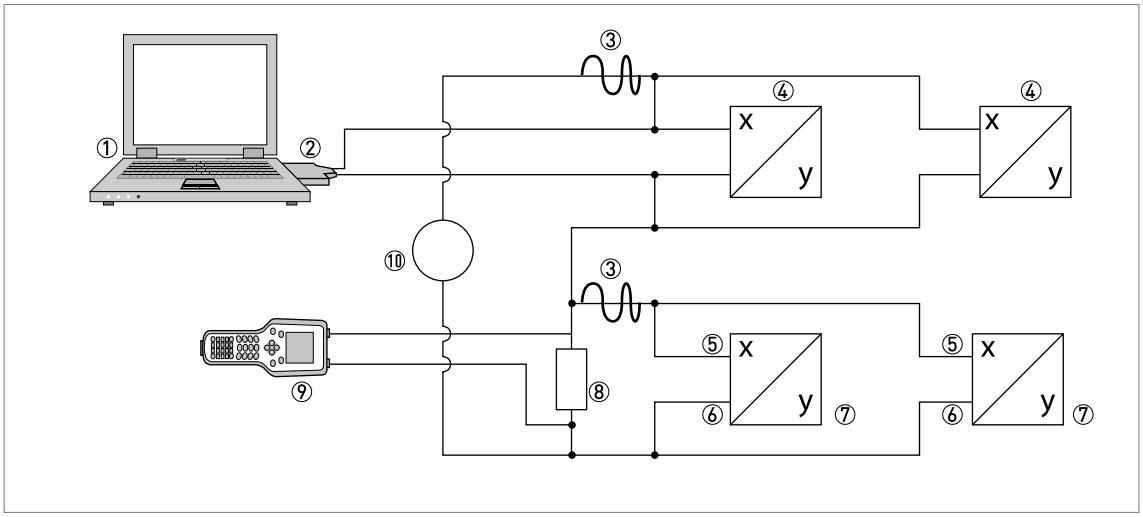

Figure 9-3: Multi-Drop connection (3-wire connection)

① Primary Master
② HART® modem
③ HART® signal
④ 2-wire external devices (slaves) with 4...20 mA, addresses > 0, powered by current loop
⑤ Signal converter terminals A (C)
⑥ Signal converter terminals A- (C-)
⑦ Connection of active or passive 4-wire devices (slaves) with 4...20 mA, addresses ≥ 0
⑧ Load ≥ 230 Ω
⑨ Secondary Master
①⓪ Power supply

9.4 Inputs/outputs and HART dynamic variables and device variables

The signal converter is available with various in-/output combinations.

The connection of the terminals A...D to the HART® dynamic variables PV, SV, TV and QV depends on the device version.

PV = Primary Variable; SV = Secondary Variable; TV = Tertiary Variable; QV = Quarternary Variable

Signal converter version	HART® dynamic variable			
	PV	SV	TV	QV
Basic I/O, connection terminals	A	D	-	-
Modular I/O and Ex i I/O, connection terminals	C	D	A	B

The signal converter can provide up to 14 measurement-related values. These values are accessible as so-called HART® device variables and can be connected to the HART® dynamic variables. The availability of these variables depends on the device versions and the settings.

Code = device variable code

Device variables

HART® device variable	Code	Type	Explanations
volume flow	20	linear	
corrected volume flow	21	linear	
mass flow	22	linear	
molar mass	23	linear	
flow speed	25	linear	
velocity of sound	26	linear	
signal gain	27	linear	
diagnosis 1	28	linear	Function and availability depends on diagnosis 1 value setting.
diagnosis 2	29	linear	Function and availability depends on diagnosis 2 value setting.
diagnosis 3	30	linear	Function and availability depends on diagnosis 3 value setting.
counter 1 (C)	6	totaliser	Valid for Basic I/O option only.
counter 1 (B)	13	totaliser	Valid for Modular I/O and Ex i I/O options only.
counter 2 (D)	14	totaliser	-
counter 3 (A)	12	totaliser	Valid for Modular I/O and Ex i I/O options only.

For the dynamic variables connected to the linear analogue outputs (for current and/or frequency) are assigned by selecting the measurement for the related outputs. Only linear device variables can be assigned in this case.

For dynamic variables not connected to linear analogue outputs both linear and totaliser device variables can be assigned.

9.5 Remote operation

In addition to the local user interface panel the device may be operated remotely via the communication interface. There are different operating tools including small handhelds and large integrated maintenance systems. For adaptation to different devices two main technologies are used: The Device Description (DD) and the Field Device Tool Device Type Manager (FDT DTM). Both a DD and a DTM contain the description of a device's user interface, parameter database and communication interface. After being installed in an operating tool they allow access to device specific data. In the DD environment an operating tool is usually referred to as "host"; in the FDT DTM environment it is called "frame application" or "FDT container".

A DD is sometimes also referred to as EDD for Enhanced Device Description. This emphasizes some enhancements in specification like e.g. GUI support but doesn't imply a new technology.

For improving interoperability between DD hosts standard menu entry points have been specified:

- Root Menu
  Default top level menu for DD host applications with limited display space (e.g. handhelds).
- Process Variables Root Menu
  Provides process measurements and set points. For GUI based DD host applications.
- Diagnostic Root Menu
  Shows device state and diagnostic information. For GUI based DD host applications.
- Device Root Menu
  Provides access to all field device capabilities. For GUI based DD host applications.
- Offline Root Menu
  Provides access to all field device capabilities that can be manipulated while the host application is not connected to the field device.

For detailed information about the standard menus refer to *HART Menu Tree* on page 144.

The support of the standard menu entry points by the different DD hosts is described next.

9.5.1 Online/offline operation

DD hosts have different characteristics and support different operating modes for configuring devices, online and offline mode.

In online mode the host application can currently communicate with the device. The device can immediately check and perform configuration changes and update dependent parameters in case.

In offline mode the host application works only with a copy of the device's configuration data set and the DD needs to imitate the device's checks and updates.

Unfortunately the DD isn't informed by the host whether it is running in online or offline mode. In order to avoid interference between update functionality of the DD and the device there is a local parameter "Online Mode?" in the "Detailed Setup / HART" menu which can be set accordingly by the user.

9.5.2 Parameters for the basic configuration

There are parameters, such as measurement of counters, selection of diagnosis values and setting of pressure and temperature correction, which require a warm start of the device following data changes before other parameters may be written. Depending on the operating mode of the host system (online/offline mode) these parameters need to be treated differently.

In online mode the settings should be changed with the corresponding online methods only, in order to perform the warm start immediately and update dependent parameters automatically afterwards.

In the menu tree these methods are located below the related parameters (e.g. in a counter menu the method "Select Measurement" below the parameter "Measurement").

In offline mode the parameter "Online Mode?" in the "Detailed Setup / HART" menu should be set to "no" before the configuration settings are changed as desired. Before writing the entire offline configuration data set to the device the method "Prepare Parameter Download" in the "Detailed Setup / HART" menu should be executed. This method writes the parameters for basic configuration to the device and performs a warm start afterwards.

INFORMATION!
The Emerson Field Communicator and Simatic PDM execute this method automatically before sending a configuration or performing a "Download to Device" respectively.

9.5.3 Units

There are separate physical units settings for configuration parameters and HART® dynamic/device variables. The units settings for configuration parameters are the same as on the device's local display. They are available in the menu "Detailed Setup / Device / Units". For each HART® dynamic/device variable the physical unit can be set individually. They are available in the menu "Detailed Setup / Process Input / HART". The different units settings can be aligned with the method "Align HART Units" in the menu "Detailed Setup / Process Input / HART".

9.6 Field Communicator 375/475 (FC 375/475)

The Field Communicator is a hand terminal from Emerson Process Management that is designed to configure HART® and Foundation Fieldbus devices. Device Descriptions (DDs) are used to integrate different devices into the Field Communicator.

9.6.1 Installation

The HART® Device Description for the signal converter must be installed on the Field Communicator. Otherwise only the functions of a generic DD are available to the user and the entire device control is not possible. A "Field Communicator Easy Upgrade Programming Utility" is required to install the DDs on the Field Communicator.

The Field Communicator must be equipped with a system card with "Easy Upgrade Option". For details consult the Field Communicator User's Manual.

9.6.2 Operation

The Field Communicator supports the DD Root Menu for online access to the device. The Root Menu is implemented as a combination of the other standard menus Process Variables Root Menu, Diagnostic Root Menu and Device Root Menu.

INFORMATION!
For more detailed information see Appendix A, HART Menu Tree Field Communicator HART Application on page 144.

Operating the signal converter via the Field Communicator is very similar to manual device control using the keyboard. The help attribute of each parameter contains its function number as a reference to the local device display and the handbook.

Parameter protection for custody transfer is the same as on the device's local display. Other specific protective functions such as the passwords for the quick setup menu and the setup menu are not supported with HART®.

The Field Communicator always saves a complete configuration for the exchange with AMS. However, in the offline configuration and when sending to the device, the Field Communicator only takes into account a partial parameter set (like the standard configuration of the old HART® Communicator 275).

9.7 Asset Management Solutions (AMS)

The Asset Management Solutions Device Manager (AMS®) is a PC program from Emerson Process Management which is designed to configure and manage HART®, PROFIBUS and Foundation Fieldbus devices. Device Descriptions (DDs) are used to integrate different devices into the AMS®.

9.7.1 Installation

If the signal converter Device Description has not yet been installed on the AMS® system, a so-called Installation Kit HART® AMS® is required. It is available for download from the website.

For installation with the Installation Kit refer to the "AMS Intelligent Device Manager Books Online" section "Basic Functionality / Device Information / Installing Device Types".

INFORMATION!
Please read the "readme.txt", which is also contained in the Installation Kit.

9.7.2 Operation

AMS supports the Process Variables Root Menu, Diagnostic Root Menu and Device Root Menu for online access to the device.

INFORMATION!
For more detailed information see Appendix A, Menu Tree AMS on page 145.

Operating the signal converter via the AMS Device Manager is similar to manual device control using the keyboard. The help attribute of each parameter contains its function number as a reference to the local device display and the handbook.

Parameter protection for custody transfer and service is the same as on the device's local display. Other specific protective functions such as the passwords for the quick setup menu and the setup menu are not supported with HART®.

When copying configurations in AMS, unit parameters need to be transferred first. Otherwise related parameters may be not transferred correctly. When the compare view has been opened during a copy process, go at first to the units section of the device menu ("Detailed Setup / Device / Units") and transfer all unit parameters. Note that read-only parameters need to be transferred individually!

9.8 Process Device Manager (PDM)

The Process Device Manager (PDM) is a Siemens PC program designed to configure HART® and PROFIBUS devices. Device Descriptions (DDs) are used to integrate different devices into the PDM.

9.8.1 Installation

If the signal converter Device Description has not yet been installed on the PDM system, a so-called Device Install HART® PDM is required for the signal converter. This is available for download from the website.

For installation with the Device Install, see the PDM manual, Section 13 - Integrating devices.

INFORMATION!
Please read the "readme.txt", which is also contained in the Installation Kit.

9.8.2 Operation

PDM supports the Process Variables Root Menu, Diagnostic Root Menu and Device Root Menu for online access to the device and the Offline Root Menu for offline configuration.

INFORMATION!
For more detailed information see Appendix A, Menu Tree PDM on page 146.

The classic approach for PDM is the offline operation with the PDM parameter table and the transfer of entire configuration data sets with the "Download to Device" and "Upload to PG/PC" functions. The parameter "Online Mode?" in the "Detailed Setup / HART" table section of the parameter table should be set to "no". However PDM also supports online operation from the "Device" and the "View" sections of the menu bar which is more similar to manual device control using the keyboard. Usually offline and online configuration data sets are separated in PDM. Still there is some interdependency e.g. regarding evaluation of parameter and menu conditionals: If e.g. the "Access Level" is changed in an online menu the offline configuration data set needs to be updated with "Upload to PG/PC" before the related online menus actually become accessible.

The help attribute of each parameter contains its function number as a reference to the local device display and the handbook.

Parameter protection for custody transfer and service is the same as on the device's local display. Other specific protective functions such as the passwords for the quick setup menu and the setup menu are not supported with HART®.

9.9 Field Device Manager (FDM)

A Field Device Manager (FDM) is basically a PC program from Honeywell used to configure HART®, PROFIBUS and Foundation Fieldbus devices. Device Descriptions (DDs) and Device Type Managers (DTMs) are used to integrate different devices into the FDM.

9.9.1 Installation

If the signal converter Device Description has not yet been installed on the FDM system, the Device Description is required in binary format and is available for download from the website.

For information on installing the Device Description, refere to the FDM User Guide - section 4.8 Managing DDs.

9.9.2 Operation

FDM supports the Process Variables Root Menu, the Diagnostic Root Menu and the Device Root Menu for online access to the device and the Offline Root Menu for offline configuration.

INFORMATION!
For more detailed information see Appendix A, HART Menu Tree FDM on page 147.

The help attribute of each parameter contains its function number as a reference to the local device display and the handbook.

Parameter protection for custody transfer is the same as on the device's local display. Other specific protective functions such as the passwords for the quick setup menu and the setup menu are not supported with HART®.

9.10 Field Device Tool Device Type Manager (FDT DTM)

A Field Device Tool Container or Frame Application is basically a PC program used to configure HART® devices. Device Type Managers (DTMs) are used to integrate different devices into a FDT container.

9.10.1 Installation

If the Device Type Manager for the signal converter has not yet been installed on the FDT Container, a setup is required which is available for download from the website.

See the supplied documentation for information on how to install and set up the DTM.

9.10.2 Operation

Operating the signal converter via DTM is very similar to manual device control using the keyboard. See also the local device display and the handbook.

9.11 HART Menu Tree

9.11.1 HART Menu Tree - Field Communicator HART Application

The Field Communicator supports the standard EDDL Root Menu.

In the signal converter HART DD it is implemented as a combination of other standard EDDL menus:

- Process Variables Root Menu (details on page 148)
- Diagnostic Root Menu (details on page 149)
- Device Root Menu (details on page 151)

The menus are located in the Field Communicator user interface as follows:

1 Offline	
2 Online	1 Process Variables (Process Variables Root Menu)
	2 Diag/Service (Diagnostic Root Menu)
	3 Quick Setup (Device Root Menu)
	4 Detailed Setup (Device Root Menu)
	5 Service (Device Root Menu)
3 Utility	
4 HART Diagnostics	

Table 9-1: Field Communicator HART Application

9.11.2 HART Menu Tree AMS - Device's context menu

AMS supports the following standard EDDL menus:

- Process Variables Root Menu (details on page 148)
- Diagnostic Root Menu (details on page 149)
- Device Root Menu (details on page 151)

The menus are located in the AMS user interface as follows:

Configure/Setup	Configure/Setup (Device Root Menu)
Compare	
Clear Offline	
Device Diagnostics	Device Diagnostics (Diagnostic Root Menu)
Process Variables	Process Variables (Process Variables Root Menu)
Scan Device	
Calibration Management	
Rename	
Unassign	
Assign / Replace	
Audit Trail	
Record Manual Event	
Drawings / Notes...	
Help...	

Table 9-2: Device's context menu

9.11.3 HART Menu Tree PDM - Menu Bar and Working Window

PDM supports the following standard EDDL menus:

- Process Variables Root Menu (details on page 148)
- Diagnostic Root Menu (details on page 149)
- Device Root Menu (details on page 151)
- Offline Root Menu (details on page 154)

The menus are located in the PDM user interface as follows:

File	
Device	Communication path
	Download to Device...
	Upload to PG/PC...
	Update Diagnostic Status
	Quick Setup (Device Root Menu)
	Detailed Setup (Device Root Menu)
	Service (Device Root Menu)
View	Process Variables (Process Variables Root Menu)
	Diag/Service (Diagnostic Root Menu)
	Toolbar
	Status Bar
	Update
Options	
Help	

Table 9-3: Menu Bar

Parameter Group Overview	(Offline Root Menu)
Parameter Table	

Table 9-4: Working Window

9.11.4 HART Menu Tree FDM - Device Configuration

FDM supports the following standard EDDL menus:

- Root Menu
- Process Variables Root Menu (details on page 148)
- Diagnostic Root Menu (details on page 149)
- Device Root Menu (details on page 151)

In the signal converter HART DD the Root Menu it is implemented as a combination of the other standard EDDL menus.

The menus are located in the FDM user interface as follows:

Entry Points
Device Functions
Online (Root Menu)
Device (Device Root Menu)
Process Variables (Process Variables Root Menu)
Diagnostic (Diagnostic Root Menu)
Method List
FDM Status
FDM Device Properties
FDM Tasks
...

Table 9-5: Device Configuration Window

9.11.5 Description of used abbreviations

- Opt Optional, depending on device implementation/configuration
- Rd Read only
- Loc Local DD, affects only DD views
- Cust Custody lock protection

9.11.6 Process Variables Root Menu

Measured Values Overview

• Actual Flow Rd • Corrected Flow Rd, Opt • Enthalpy Flow Rd, Opt • Mass Flow Rd • Molar Mass Rd, Opt • Specific Enthalpy Rd, Opt • Density Rd, Opt • Flow Speed Rd	• Velocity of Sound Rd • Gain Rd • Diagnostics 1 Rd, Opt • Diagnostics 2 Rd, Opt • Diagnostics 3 Rd, Opt • Counter 1 Rd • Counter 2 Rd • Counter 3 Rd

Output, HART Dynamic Variables

Primary • Measured Value Rd • Percent Range Rd • Loop Current Rd	Secondary • Measured Value Rd • Percent Range Rd • Output Value Rd, Opt
Tertiary • Measured Value Rd • Percent Range Rd • Output Value Rd, Opt	Quaternary • Measured Value Rd • Percent Range Rd • Output Value Rd, Opt

Output (Chart)

Output (Bar) • PV Measured Value Rd • PV Loop Current Rd • SV Measured Value Rd, Opt • SV Output Value Rd, Opt • TV Measured Value Rd, Opt • TV Output Value Rd, Opt • QV Measured Value Rd, Opt • QV Output Value Rd, Opt	Output (Scope) • PV Measured Value Rd • PV Output Value Rd • SV Measured Value Rd, Opt • SV Output Value Rd, Opt • TV Measured Value Rd, Opt • TV Output Value Rd, Opt • QV Measured Value Rd, Opt • QV Output Value Rd, Opt

9.11.7 Diagnostic Root Menu

Status

Standard	Device status Rd	Primary variable outside the operation limits
		Non-primary variable outside the operation limits
		Analog output outside the operating range limits
		Analog output in fixed mode
		More status available
		Cold start occured
		Configuration changed
		Field device malfunctioned
	Write Protect Rd	
Failure (device)	**Failure (device) 1** Rd F error in device / F IO1 / F parameter / F IO2 / F configuration / F display / F current in-/output A / F current in-/output B /	
	Failure (device) 2 Rd F current output C / F software user interface / F hardware settings / F hardware detection / F RAM/ROM error IO1 / F RAM/ROM error IO2 / F Fieldbus	
	Failure (device) 3 Rd F communication dsp-up / F sensor driver / F uProc. / F dsp / F parameter frontend	
Failure (application)	**Failure (application) 1** Rd F application error / F open circuit A / F open circuit B / F open circuit C / F over range A (current) / F over range B (current) / F over range C / F over range A (pulse)	
	Failure (application) 2 Rd F over range B (pulse) / F over range D / F active settings / F factory settings / F backup 1 settings / F backup 2 settings / F wiring A (output) / F wiring B (output)	
	Failure (application) 3 Rd F wiring A (input) / F wiring B (input) / F flow exceeding limit / F signal lost path 1 / F signal lost path 2	
	Failure (application) 4 Rd F transducer delay / F temperature input / F pressure input / F p&t input / F VoS monitor	
Out of specification	**Out of specification 1** Rd S out of specification / S overflow counter 1 (C) / S overflow counter 1 (B) / S overflow counter 2 / S overflow counter 3 / S backplane invalid / S error current A / S error current B	
	Out of specification 2 Rd S unreliable 1 / S unreliable 2 / S unreliable 3 / S front end calibration / S dsp timing error	
Check function & Information	**Check function** Rd C checks in progress / C simulation flow / C simulation VoS / C simulation fieldbus	
	Information 1 Rd	
	I counter 1 stopped (C) / I counter 1 stopped (B) / I counter 2 stopped / I counter 3 stopped / I power fail / I control input A active / I control input B active / I over range display 1	
	Information 2 Rd I over range display 2 / I backplane sensor / I backplane settings / I backplane difference / I optical interface	
	Information 3 Rd I start up	

Simulation

Process Input	<Simulation Volume Flow> / <Simulation Velocity of Sound>
Input/Output	<Simulation A> / <Simulation B> / <Simulation C> / <Simulation D>

Actual Values

Actual Values	Actual Volume Flow Rd / Actual Corrected Flow Rd, Opt / Actual Enthalpy Flow Rd, Opt / Actual Mass Flow Rd, Opt / Actual Molar Mass Rd, Opt / Actual Specific Enthalpy Rd, Opt / Actual Density Rd, Opt / Actual Dynamic Viscosity Rd, Opt / Actual Flow Speed Rd / Actual Pressure Rd, Opt / Actual Temperature Rd, Opt / Actual Current Input A Rd, Opt / Actual Current Input B Rd, Opt / Operating Hours Rd
Velocity of Sound	Actual VoS Path 1 Rd / Actual VoS Path 2 Rd, Opt
Gain	Actual Gain Path 1 Rd / Actual Gain Path 2 Rd, Opt
Signal to Noise Ratio	Actual SNR Path 1 Rd / Actual SNR Path 2 Rd, Opt

Information

Information	C number Rd /
Process Input	<Sensor CPU> / <Sensor DSP> / <Sensor Driver>
<SW.REV.MS>	-
<SW.REV.UIS>	-
Electronic Revision ER>	-

Test/Reset

Test/Reset	<List Errors> / <Reset Errors> / <Warmstart> / <Device reset> / <Reset Configuration Changed Flag> / <Read GDC Object> Opt / <Write GDC Object> Opt

9.11.8 Device Root Menu

Quick Setup

Quick Setup	Language / Tag / Polling Address / <Reset Errors> Opt Reset Counter 1 / Reset Counter 2 / Reset Counter 3 Opt

Detailed Setup

Process Input

Calibration	Meter Size / <Zero Calibration> / GK
Filter	Minimum Limit / Maximum Limit / Flow Direction / Time Constant / Threshold Low Flow Cutoff / Hysteresis Low Flow Cutoff
Plausibility	Error Limit / Counter Decrease / Counter Limit
Simulation	<Simulation Volume Flow> / <Simulation Velocity of Sound>
Information	<Sensor CPU> / <Sensor DSP> / <Sensor Driver> / <Calibration Date> / <Calibration Date> / Serial Number Sensor / V Number Sensor
VoS monitor Opt	Monitor Velocity of Sound **Monitor Settings Opt** Matching Factor / Actual Ratio Measurement/Calibration / <New Match?> / VoS Tolerance / Time Constant
Linearization	Linearization / Dynamic Viscosity Opt
General Opt	Adiabatic Index
P&T Correction Opt	P&T Correction / <Set P&T Correction> / P&T Inputs Opt / Pipe Temperature Opt / Pipe Pressure Opt / Density Opt
Diagnosis Value	Diagnosis 1 / <Set Diagnosis 1> / Diagnosis 2 / <Set Diagnosis 2> / Diagnosis 3 / <Set Diagnosis 3>
HART	Sensor s/n / <Align HART Units> **Actual Flow, Corrected Flow Opt, Enthalpy Flow Opt, Mass Flow , ...** Unit / Format / Upper Sensor Limit / Lower Sensor Limit / Minimum Span

I/O

Hardware	Terminals A / Terminals B / Terminals C / Terminals D
Current Output A/B/C Opt	Range 0% Cust / Range 100% Cust / Extended Range Min Cust / Extended Range Max Cust / Error Current Cust / Error Condition Cust / Measurement Cust / Range Min Cust / Range Max Cust / Polarity Cust / Limitation Min Cust / Limitation Max Cust / LFC Threshold Cust / LFC Hysteresis Cust / Time Constant Cust / Special Function Cust / Threshold Range Change Opt, Cust / Hysteresis Range Change Opt, Cust / <Information> / <Simulation>
Frequency Output A/B/D Opt	Pulse Shape Opt, Cust / Pulse Width Opt, Cust / 100% Pulse Rate Opt, Cust / Measurement Cust / Range Min Cust / Range Max Cust / Polarity Cust / Limitation Min Cust / Limitation Max Cust / LFC Threshold Cust / LFC Hysteresis Cust / Time Constant / Invert Signal Cust / Special Function Opt, Cust / Phase Shift Opt, Cust / <Information> / <Simulation>
Pulse Output A/B/D Opt	Pulse Shape Opt, Cust / Pulse Width Opt, Cust / Max. Pulse Rate Opt, Cust / Measurement Cust / Pulse Value Unit Rd, Cust / Value Per Pulse Cust / Polarity Cust / LFC Threshold Cust / LFC Hysteresis Cust / Time Constant / Invert Signal Cust / Special Function Opt, Cust / Phase Shift Opt, Cust / <Information> / <Simulation>

Status Output A/B/C/D Opt	Mode / Output A Opt / Output B Opt / Output C Opt / Output D Opt / Invert Signal / <Information> / <Simulation>
Limit Switch A/B/C/D Opt	Measurement / Threshold / Hysteresis / Polarity / Time Constant / Invert Signal / <Information> / <Simulation>
Control Input A/B Opt	Mode Cust / Invert Signal / <Information> / <Simulation>
Current Input A/B Opt	Range 0% Rd / Range 100% Rd / Extended Range Min / Extended Range Max / Measurement / Range Min Cust / Range Max Cust / Time Constant / <Information> / <Simulation>

I/O Counter

Counter 1/2/3 Opt	Counter Function Cust / Measurement Opt / <Select Measurement> Opt / LFC Threshold Opt / LFC Hysteresis Opt / Time Constant Opt / Preset Value Opt / <Reset Totalizer> Opt / <Set Counter> Opt / <Stop Counter> Opt / <Start Counter> Opt / <Information>

I/O HART

I/O HART	PV is Rd / SV is / TV is / QV is / D/A Trim Cust / Apply Values Cust

Device

Device Info	Tag / C Number Rd / Device Serial No. Rd / Electronic Serial No. Rd / <SW.REV.MS> / <Electronic Revision ER> / <Circuit Board Info>
Display	Language / Default Display Cust / <SW.REV.UIS>

1./2. Meas. Page

1./2. Meas. Page	Function Cust / Measurement 1.line / Range Min Cust / Range Max Cust / Limitation Min / Limitation Max / LFC Threshold / LFC Hysteresis / Time Constant / Format 1st Line / Measurement 2nd Line Opt, Cust / Format 2nd Line Opt, Cust / Measurement 3rd Line Opt, Cust / Format 3rd Line Opt, Cust
Graphic Page	Select Range / Range Centre / Range +/- / Time Scale
Special Functions	<List Errors> / <Reset Errors> / <Warmstart> / <Read GDC Object> Opt / <Write GDC Object> Opt
Units	Meter Size Unit / Volume Flow Unit Cust / Corrected Volume Flow Unit Rd, Opt / Extended Corrected Vol. Flow Unit Opt, Cust / Enthalpy Flow Unit Rd, Opt / Extended Enthalpy Flow Unit Opt, Cust / Mass Flow Unit Cust / Specific Enthalpy Unit Rd, Opt / Extended Specific Enthalpy Unit Opt, Cust / Velocity Unit / Volume Unit Cust / Extended Volume Unit Opt, Cust / Corrected Volume Unit Rd, Opt / Extended Corrected Volume Unit Opt, Cust / Enthalpy Unit Rd, Opt / Extended Enthalpy Unit Opt, Cust / Mass Unit Cust / Density Unit Rd / Extended Density Unit Opt, Cust / Pressure Unit Cust / Temperature Unit Cust

HART

HART	HART Rd / Online Mode? Loc / <Prepare Parameter Download>
	Identification Polling address / Tag / Manufacturer Rd / Model Rd / Device ID Rd
	HART Revisions Universal revision Rd / Field device revision Rd / DD version Rd
	Device Info Descriptor / Message / Date / Final assembly number / Software revision / Hardware revision / Write Protect Rd
	Preambles Number of request preambles Rd / Number of response preambles

Service

Service Access	Access Level HART Rd / <Enable Service Access> / <Disable Service Access> Opt

Signal Data Opt

Signal Data	Transducer Type / Window Start / Window End / Pulse Form / Detection Method
	Detection Parameters Trigger Level / Trigger Margin / Envelope Margin / Peak Margin / Number Of Peaks / Envelope Ratio 1 / Envelope Ratio 2 / Envelope Ratio 3 / Envelope Ratio 4 / RelmaxLow / RelmaxHigh / MaxTrackFactor / MaxTrackOffset / MaxTrackLimit / MaxTrackHit / MaxTrackLim / XcorrActive / <Set FixedWinloc> / Fixed Gain / Xdetect / GainUnbalWarning / GainUnbalSigLost / XdetSNRLimit / XdetAverageNo / SNRLimSigLost / SNRLimWarning / Env. Shift monitor / Env. Ratio monitor
	Dead Time / <Impedance Test>
	Delay Test Mode / Act. Delay T1.1 Opt / Act. Delay T1.2 Opt / Act. Delay T2.1 Opt / Act. Delay T2.2 Opt / TD Trigger Level Opt / TD Trigger Margin Opt / TD Window Start Opt / TD Window End Opt / TD Dead Time Opt / Repetition Pings Opt
	Number Of Stacks / Number Of Bursts / Burst Period / Ping Time / Step-Up Voltage / <Set DSP Sets>

Path Data Opt

Path Data	Number Of Paths / Velocity Of Sound / <Measure Path Lengths> / Path Length 1 / Path Length 2 / Weight 1 / Weight 2 / Beam Angle / T Expansion Coeff. / P Expansion Coeff. / Transducer Compression

Service Calibration Opt

Service Calibration	Front End Option Rd
	Zero Instrument Zero Offset Path 1 / Zero Offset Path 2
	Zero Converter Path 1 Rd / Path 2 Rd

Service Info Opt

Service Info	Detected C-No. Rd / C-Number (8th Position) Rd / Device Serial Number Rd / Serial Number Sensor Rd / V Number Sensor Rd

9.11.9 Offline Root Menu

Identification

Identification	Tag / Descriptor / Message / Date
Device	Manufacturer Rd / Device Type Rd / Device ID Rd / Final Assembly Number / C number Rd / Device Serial No. Rd / Electronic Serial No. Rd

Detailed Setup

Mapping of Variables

Mapping of Variables	PV is Rd / SV is / TV is / QV is

Process Input

Calibration	Meter Size / GK
Filter	Minimum Limit / Maximum Limit / Flow Direction / Time Constant / Threshold Low Flow Cutoff / Hysteresis Low Flow Cutoff
Plausibility	Error Limit / Counter Decrease / Counter Limit
Information	Serial Number Sensor / V Number Sensor
VoS monitor Opt	Monitor Velocity of Sound **Monitor Settings Opt** Matching Factor / Actual Ratio Measurement/Calibration / VoS Tolerance / Time Constant
Linearization	Linearization / Dynamic Viscosity Opt
General Opt	Adiabatic Index
P&T Correction Opt	P&T Correction / P&T Inputs Opt / Pipe Temperature Opt / Pipe Pressure Opt / Density Opt
Diagnosis Value	Diagnosis 1 / Diagnosis 2 / Diagnosis 3
HART	Sensor s/n / <Align HART Units> **Actual Flow, Corrected Flow Opt, Enthalpy Flow Opt, Mass Flow , ...** Unit / Format / Upper Sensor Limit / Lower Sensor Limit / Minimum Span

I/O

Hardware	Terminals A / Terminals B / Terminals C / Terminals D
Current Output A/B/C Opt	Range 0% Cust / Range 100% Cust / Extended Range Min Cust / Extended Range Max Cust / Error Current Cust / Error Condition Cust / Measurement Cust / Range Min Cust / Range Max Cust / Polarity Cust / Limitation Min Cust / Limitation Max Cust / LFC Threshold Cust / LFC Hysteresis Cust / Time Constant Cust / Special Function Cust / Threshold Range Change Opt, Cust / Hysteresis Range Change Opt, Cust
Frequency Output A/B/D Opt	Pulse Shape Opt, Cust / Pulse Width Opt, Cust / 100% Pulse Rate Opt, Cust / Measurement Cust / Range Min Cust / Range Max Cust / Polarity Cust / Limitation Min Cust / Limitation Max Cust / LFC Threshold Cust / LFC Hysteresis Cust / Time Constant / Invert Signal Cust / Special Function Opt, Cust / Phase Shift Opt, Cust
Pulse Output A/B/D Opt	Pulse Shape Opt, Cust / Pulse Width Opt, Cust / Max. Pulse Rate Opt, Cust / Measurement Cust / Pulse Value Unit Rd, Cust / Value Per Pulse Cust / Polarity Cust / LFC Threshold Cust / LFC Hysteresis Cust / Time Constant / Invert Signal Cust / Special Function Opt, Cust / Phase Shift Opt, Cust
Status Output A/B/C/D Opt	Mode / Output A Opt / Output B Opt / Output C Opt / Output D Opt / Invert Signal

Limit Switch A/B/C/D Opt	Measurement / Threshold / Hysteresis / Polarity / Time Constant / Invert Signal
Control Input A/B Opt	Mode Cust / Invert Signal
Current Input A/B Opt	Range 0% Rd / Range 100% Rd / Extended Range Min / Extended Range Max / Measurement / Range Min Cust / Range Max Cust / Time Constant
Counter 1/2/3 Opt	Counter Function Cust / Measurement Opt / LFC Threshold Opt / LFC Hysteresis Opt / Time Constant Opt / Preset Value Opt

I/O HART

I/O HART	PV is Rd / SV is / TV is / QV is

Device

Device Info	Tag / C Number Rd / Device Serial No. Rd / Electronic Serial No. Rd
Display	Language / Default Display Cust / <SW.REV.UIS>
1./2. Meas. Page	Function Cust / Measurement 1.line / Range Min Cust / Range Max Cust / Limitation Min / Limitation Max / LFC Threshold / LFC Hysteresis / Time Constant / Format 1st Line / Measurement 2nd Line Opt, Cust / Format 2nd Line Opt, Cust / Measurement 3rd Line Opt, Cust / Format 3rd Line Opt, Cust
Graphic Page	Select Range / Range Centre / Range +/- / Time Scale
Units	Meter Size Unit / Volume Flow Unit Cust / Corrected Volume Flow Unit Rd, Opt / Extended Corrected Vol. Flow Unit Opt, Cust / Enthalpy Flow Unit Rd, Opt / Extended Enthalpy Flow Unit Opt, Cust / Mass Flow Unit Cust / Specific Enthalpy Unit Rd, Opt / Extended Specific Enthalpy Unit Opt, Cust / Velocity Unit / Volume Unit Cust / Extended Volume Unit Opt, Cust / Corrected Volume Unit Rd, Opt / Extended Corrected Volume Unit Opt, Cust / Enthalpy Unit Rd, Opt / Extended Enthalpy Unit Opt, Cust / Mass Unit Cust / Density Unit Rd / Extended Density Unit Opt, Cust / Pressure Unit Cust / Temperature Unit Cust

HART

HART	HART Rd / Online Mode? Loc
	Identification Polling address / Tag / Manufacturer Rd / Model Rd / Device ID Rd
	HART Revisions Universal revision Rd / Field device revision Rd / DD-Version Rd
	Device Info Descriptor / Message / Date / Final assembly number / Software revision / Hardware revision / Write Protect Rd
	Preambles Number of request preambles Rd / Number of response preambles

Service

Service Access	Access Level HART Rd
Signal Data	Transducer Type / Window Start / Window End / Pulse Form / Detection Method
	Detection Parameters Trigger Level / Trigger Margin / Envelope Margin / Peak Margin / Number Of Peaks / Envelope Ratio 1 / Envelope Ratio 2 / Envelope Ratio 3 / Envelope Ratio 4 / RelmaxLow / RelmaxHigh / MaxTrackFactor / MaxTrackOffset / MaxTrackLimit / MaxTrackHit / MaxTrackLim / XcorrActive / <Set FixedWinloc> / Fixed Gain / Xdetect / GainUnbalWarning / GainUnbalSigLost / XdetSNRLimit / XdetAverageNo / SNRLimSigLost / SNRLimWarning / Env. Shift monitor / Env. Ratio monitor
	Dead Time / <Impedance Test>
	Delay Test Mode / TD Trigger Level Opt / TD Trigger Margin Opt / TD Window Start Opt / TD Window End Opt / TD Dead Time Opt / Repetition Pings Opt
	Number Of Stacks / Number Of Bursts / Burst Period / Ping Time / Step-Up Voltage
Path Data	Number Of Paths / Velocity Of Sound / Path Length 1 / Path Length 2 / Weight 1 / Weight 2 / Beam Angle / T Expansion Coeff. / P Expansion Coeff. / Transducer Compression
Service Calibration	Front End Option Rd
	Zero Instrument Zero Offset Path 1 / Zero Offset Path 2
	Zero Converter Path 1 Rd / Path 2 Rd
Service Info	Detected C-No. Rd / C-Number (8th Position) Rd / Device Serial Number Rd / Serial Number Sensor Rd / V Number Sensor Rd

KROHNE – Products, Solutions and Services

- Process instrumentation for flow, level, temperature, pressure measurement and process analytics
- Flow metering, monitoring, wireless and remote metering solutions
- Engineering, commissioning, calibration, maintenance and training services

Head Office KROHNE Messtechnik GmbH
Ludwig-Krohne-Str. 5
47058 Duisburg (Germany)
Tel.: +49 203 301 0
Fax: +49 203 301 10389
info@krohne.de

The current list of all KROHNE contacts and addresses can be found at:
www.krohne.com

© KROHNE 11/2022 - 4001102306 - MA OPTISONIC 7300 R06 en - Subject to change without notice.